CHAPTER 16

Design of Intermittent Motion Mechanisms

PART I—DESIGN PROCEDURE

Now that there is a repertoire of mechanisms to choose from, let us see what steps should be taken to solve specific design problems. Since design is (at least, in part) a creative act it is a little arrogant, perhaps, to attempt to list a design procedure. I have known many successful designers whose approach differed considerably from that given below. Nevertheless, this procedure has worked for me, and presumably, it would also work for others.

1. Defining the Primary Problem

Never start to solve a problem until it has been clearly defined. In the case of indexing mechanisms, the primary problem is to produce intermittent motion of a certain type. The following are the basic specifications to this end:

a. Indexing rate required (number of steps per minute)
b. Indexing accuracy required
c. Dwell-motion pattern required
d. Size of load (heavy, medium, or lightduty)
e. Cost situation (an expensive mechanism is acceptable, or medium or low-cost must be achieved).

2. Defining Secondary Problems

A definition of indexing rate, load, cost, etc., usually determines which major classifications of indexing devices are candidates for a particular design solution. But these specifications alone rarely define the complete problem. Perhaps a size or weight restriction must be placed upon the indexing device. Perhaps special acceleration patterns are needed, or a "mechanical advantage" may be necessary. There may be unusual environmental problems; automatic vending equipment located at the seashore is exposed to a remarkable amount of salt content in the air, for example. In Table 16-1 are listed some of the many factors which the designer may have to consider in selecting a particular intermittent motion mechanism for a specific design.

3. Listing Primary Candidates

Next, consider the various types of intermittent motion mechanisms which have been discussed. Make a mental or written list of those which appear to be the most likely candidates for solving the primary problems (for example, a certain indexing rate, dwell-motion pattern, load capacity, etc.). Table 16-2, at the end of this section, lists the principal features of many of the devices which have been discussed.

The table defines the limits of my own experience with various types of intermittent motion mechanisms. Do not let my knowledge limit you, however, I am sure it would be possible to find some other designs which would be better (or worse) than those indicated here.

Table 16-3 gives detailed information on the input-output motion characteristics of most of

Table 16–1. Design Parameters

SPEED Cycling rate Velocity while in motion	EASE OF CONTROL Mechanism stands alone Other components required: electronic drive circuits, sensors, hydraulic circuits, etc.	RISK QUOTIENT Does success depend on unknowns? Is this risk really necessary? Is there an alternate solution that involves less risk?
SIZE		What can be done to reduce or evaluate the unknowns?
LOAD CAPACITY	MOTION CURVES Involve impact Do not involve impact Can be altered by the designer	EXPECTED PERFORMANCE VERSUS THAT OF THE
COST		COMPETITION
ENVIRONMENT Temperature Shock and vibration Vacuum Humidity Salt spray Dust Explosive	SYNCHRONOUS OR ASYNCHRONOUS Designed to operate at a fixed or variable cycling rate.	FITTING COMPANY'S ABILITY Does it fit company's present or anticipated skills? In: Design Manufacturing Sales Service
	SERVICEABILITY	
	LEGAL REQUIREMENTS	
TYPE OF INPUT Continuous Impulse	Accuracy Safety Noise	POWER CONSUMPTION AND EFFICIENCY
DWELL AND MOTION PATTERN Duration of output dwell versus input motion Output displacement versus input displacement Number of dwells per revolution of output Number of output dwells per revolution of input Dwell-motion ratio	MECHANICAL ADVANTAGE Required Useful Not pertinent	UNUSUAL SALES FEATURES REQUIRED
	DEGREE OF CONTROL OVER LOAD Good Fair Poor	CAPACITY TO TOLERATE OVERLOAD
		OPERATING COSTS
		WEIGHT
INPUT-OUTPUT Parallel or at right angles	RELIABILITY Will mechanism "always" function?	MANUFACTURE VERSUS PURCHASE
STABILITY OF PERFORMANCE When new When worn	What if it does not? Minor nuisance or catastrophe?	PATENT SITUATION Patentable Interference problems

the mechanisms illustrated in this text, and Table 16–4 lists some of the typical applications for various types of mechanisms. These three tables should be helpful in rapidly selecting possible candidates to solve your design problems.

4. Reviewing the List with the Secondary Problems in Mind

Getting a little deeper into the problem, you should attempt to eliminate any of the primary

candidates that fail to meet the important special or secondary requirements for the design. But care must be taken with all of this "eliminating," as the solution to your design problem may very well consist of a slightly modified mechanism. Do not discard a category merely because the obvious members of that branch of the "family" fail to meet one of the requirements. Again, Table 16-2 reflects my own knowledge or experience in this field; do not feel limited or confined by it.

5. Choose the Most Promising Approach

Perhaps only one "solution" will be found by following the previous steps; or you may have found several possibilities. In any event, the time has come for you to select one candidate for further evaluation. This could be either a "pure" mechanism (for example, an external Geneva), orat might be a modified mechanism to satisfy a special situation (for example, a Geneva driven by a four-bar linkage to modify the acceleration pattern). It also may be a combination of two or more types of intermittent motion devices (for example, a Geneva driven by a clutchbrake combination to modify the dwell-motion ratio).

In order to make a selection, you will probably be facing the almost inevitable problem of choosing between apples and hammers. If it were a decision between apples and oranges, it might not be so difficult, for at least they are both pieces of fruit. But in most design situations, there will be two or more possible solutions to a design problem, each having an entirely different set of advantages and disadvantages. One solution, for example, may offer everything you need in the way of reliability, but the mechanism may be a little larger than you plan, and its cost is on the high side. A second solution may offer exceptional speed, a high degree of patent protection, and be easy to make on the company's molding machines. A third solution may be very quiet, remarkably easy to service, and have almost infinite life. Presumably, all three possibilities satisfy your main requirements of indexing speed, load capacity, etc. Your job then is to decide whether low noise level is more desirable than patent protection or unusual reliability, for example. These are the kinds of questions that make a designer yearn for the wisdom of Solomon, for in any event, you must make a selection.

6. Incorporating the Mechanism into Your Design

You have now picked the most promising candidate. Presumably, it is only a component of a larger machine or instrument. Next, you must incorporate it into that larger design. As you do this, you will almost inevitably encounter major or minor problems which you had not anticipated. The size is wrong; or the mechanism requires right-angle shafts and yet your design would be neater if input and output were on parallel shafts; or the device will produce impact and you find you cannot incorporate the large bearings required to tolerate this; etc.

Do not give up on encountering these obstacles, overcome them as well as possible and continue until you strike an obstacle that is definitely insurmountable or until the mechanism is finally successfully incorporated into your design, even though it may be at some sacrifice to your original intentions. This is not recommended simply because I think designers should be stubborn, but because I think a struggle of this kind is often necessary to uncover the *real* problems in a given design situation. At the beginning of your work, you may think you know what the problems are, but it is only after struggling through a complete layout that you really uncover them all.

Do not forget to consider what the performance of the design will be after it has worn a little, by using drawings or plastic cutouts, or models, to study the effects of dimensional changes. Remember also, that intermittent motion places a severe burden on most mechanisms and small dimensional changes can cause significant changes in performance. Try to discover and eliminate all the potential wear points that might affect performance. Also consider all the design parameters listed in Table 16-1 and honestly list the advantages and disadvantages of your new system, now that you have worked it out. This is also a good time to calculate a first, rough cost estimate to compare with your initial estimate; are you in the ball park or did the modifications you were forced to make prove too costly?

7. Reconsidering Other Possible Solutions

Now that you know what the problems really are, reconsider some of the other possible solutions. You

may see one that on second thought is quite good and gets around some of the unexpected difficulties encountered while incorporating your first choice into the design. If you make another selection at this point, carry it all the way, also. You may uncover another crop of secondary problems or you may find that it is, indeed, an improvement over your first choice.

8. Warning

Try not to fall into the designer's main trap which is picking a particular solution simply because he thought of it, ego-satisfying though this may be. Pick the best solution for this design even if it happens to be the most common one available; proving that there is at least one designer who can place the welfare of his customer and his company above any desire for self-expression.

9. Design Refinements

If your second solution encounters a new crop of difficulties, you may have to go through the cycle a third time. But eventually you will find one that appears to be an acceptable answer to your main and secondary problems. Go still further; evaluate the "final" design to see if shapes, assemblies, motions, or controls can be simplified even more. Can you expand or reduce function? Can you combine elements? Can you optimize the sequence of operations? Can you improve safety? In other words; act objectively as a design review team, to put those final touches on the device; all of which separates the master designer from the "couldn't care less" school.

It is not to be assumed that your design should be improved indefinitely; nothing will drive a design boss up the wall faster and for better reason. A design that is "too good" is almost as uneconomical as one that is not good enough. The idea is not to let your initial "final" solution rest until you have taken a quick look, at least, at improvements of the type described.

10. Design Review

The time has now come to turn your design over to others for their evaluation. The average newspaper reader can easily detect any bias that the reporter would swear does not exist in his prize article. By the same token, another designer or engineer can spot deficiencies in a design that the designer simply cannot see perhaps because of personal prejudice based on his own experience; because of his desire for self-expression; or because he has just plain overlooked something; etc. Let someone else evaluate your design even if your company does not have a formal design review group. And listen to your critic--debate his conclusions to learn what they are based upon, then modify your design or not, depending upon whether his observations seem valid. But do not be on the defensive until you have really understood what he is saying and have determined whether or not he has actually uncovered a valid problem.

This is also a good time to get another cost estimate. But this time it should be done by someone else, and should be as rigorous as time and information will allow.

By the time you get through all this, you may find that your solution is no longer a solution and you will have to start all over. If so, go back to Steps 3 and 4, or possibly even 1 and 2, and repeat the entire process. Each time through will make you more aware of the total problem and of the advantages and disadvantages of the various solutions in solving that problem. Not infrequently, you will have to throw away all possible common solutions and innovate a new intermittent motion mechanism or system to solve your particular problem. If this were not the case, this book would have been only a fraction of its present length! As long as you are innovating because the design demands it, rather than because your ego demands it, no one can complain. In fact, this is what you are paid for.

Well, we have come a long way and, hopefully, know a great deal more about the mechanics and mechanisms of intermittent motion. This class of mechanism has had a long and important past, as the "Historical Notes" have suggested. I hope each of you will contribute something to its endless and important future.

Design Parameters

Some of the factors which must be considered in selecting a particular intermittent motion mechanism for a particular design are listed in Table 16–1. But the characteristics of the mechanisms we have discussed and a partial listing of their applicability are given in Tables 16-2, 16-3, and 16–4.

Table 16-2. Specifications and Characteristics of Various Types of Intermittent Motion Mechanisms

Type of Mechanism	Cycling Rate (SPM)	Dwell-Motion Ratio (Output-) Time	Relative Load Capacity	Relative Cost	Indexing Precision	Performance Stability		Controls for Mechanisms are:	Degree of Control Over Load
						New	Worn		
Impulse ratchet	1500	High	Low	Low	Moderate	Fair	Fair to poor	Simple	Fair
Cam ratchet	A few hundred	Moderate	Moderate to high	Low to moderate	Moderate	Good	Fair	Simple	Fair to good
Cam	1000	Moderate	Very high	Moderate	High	Excellent	Good	None	Excellent
Instrument Genevas (external)	10,000	Low	Low	Very low	Moderate	Good	Fair	None	Good
Machine Geneva (external)	Hundreds	Low	High	Moderate	Moderate	Excellent	Good	None required	Good
Mutilated gearing	5000	Low to Moderate	Very low	Very low	Moderate	Good	Good	None required	Good
Cycloidal gearing	Few thousand	Very low	Low to moderate	Moderate	Poor to fair	Good	Fair	None required	Excellent
Differential gearing	Few thousand	Very low	High	Moderate to high	Poor to fair	Excellent	Good	Moderate complexity	Excellent
Clock and watch escapements (tuned)	10 to 100	Low	Very low	Low to moderate	Very high	Excellent	Poor	None	Excellent
Machine escapement	10,000	Moderate to high	Low	Low	High	Fair	Fair	Simple	Fair
Inverse escapement	3500	High	Low	Very low	Moderate	Fair	Poor	None required	Fair
Clutch-brake systems	10,000	Moderate to high	Moderate to high	Moderate to high	Low to moderate	Fair	Fair	Complex	Fair to good
Step motor	960,000	Low to high (depending on type)	Low to high (depending on type)	Moderate to high	Moderate	Fair	Poor	Complex	Fair to good
Star wheel	Hundreds to thousands	Moderate	High	Low to moderate	Moderate	Excellent	Good	None required	Good
Roll cam	Thousands	Moderate to high	Moderate to high	Moderate	Moderate	Good	Poor	Moderate complexity	Fair to good

Type of Mechanism	Type of Input to Mechanism	Input Displacement		Output Displacement per Motion	Number of Output Dwells		Designed to Run at Fixed (Synchronous) or Variable (Asynchronous) Rate	Input-Output Parallel or Right Angle
		During Output Dwell	During Output Motion		Per Output Revolution	Per Input Revolution		
Impulse ratchet	Electrical pulses or cam loaded spring	5° to 30°	5° to 30°	1° to 45°	8 to 360	D.A.	Either	D.A.
Cam ratchet	Rotating cam	90° to 300°	60° to 270°	0.1° to 90°	4 to hundreds	1 to 2	Fixed	Parallel
Cam	Rotating shaft	90° to 300°	90° to 270°	90° to 270°	1 to 4	1 to 5	Fixed	Either
Instrument Geneva (external)	Rotating shaft	200° to 270°	100° to 90°	20° to 90°	4 to 8	1 to 2	Fixed	Parallel
Machine Geneva (external)	Rotating shaft	200° to 270°	160° to 90°	20° to 90°	4 to 8	1 to 2	Fixed	Parallel
Mutilated gearing	Rotating shaft	10° to 350°	10° to 350°	10° to many turns	1 to 36	1 to 5	Fixed	Parallel
Cycloidal gearing	Rotating shaft	Few degrees (theoretically 0°)	30° to 360°	30° to nearly 360°	1 to 12	1 to 12	Fixed	Parallel
Differential gearing	Two rotating shafts	0° to many turns	Fractions of a degree to many turns	Fraction of a degree to hundreds of degrees	One to hundreds	One to hundreds	Fixed	Either
Clock and watch escapements (tuned)	Stalled rotating shaft	0°	10° to 30°	10° to 30°	12 to 36	12 to 36	Fixed	Parallel
Machine escapement	Rotating shaft	Few degrees to many turns	Few degrees to many turns	Few degrees to many turns	1 to 100	Fraction of one to 100	Variable	Parallel
Inverse escapement	Rotating shaft or electrical pulses	5° to 300°	5° to 180°	4° to 60°	6 to 90	D.A.	Variable	Parallel
Clutch-brake systems	Rotating shaft	Partial revolution to many revolutions	Partial Revolution to many revolutions	A few degrees to many revolutions	One to hundreds	One to hundreds	Variable	Mostly parallel
Step motor	Electrical pulses	D.A.	D.A.	0.9° to 180°	2 to 400	D.A.	Either	D.A.
Star wheel	Rotating shaft	30° to 300°	60° to 320°	60° to 360°	1 to 8	1 to 3	Fixed	Parallel
Roll cam	Rotating shaft	180° to many turns	30° to many turns	30° to 360°	1 to 12	1 to 5	Variable	Parallel

Table 16-2 (Cont.). Specifications and Characteristics of Various Types of Intermittent Motion Mechanisms

Type of Mechanism	Reliability	Basic Mechanism Offers Mechanical Advantage	Related Components Required	Relative Size	Degree of Control Over: Motion Curves	Degree of Control Over: Dwell-Motion Ratio	Is Impact Present?	Is Jerk Present	Discussed in Chapter
Impulse ratchet	Good	No	Switch or pulse circuits	Small	Poor	High	Yes	Yes	7
Cam ratchet	Good to excellent	A little	None	Small to moderate	Fair	Poor	A little	Probably	7
Cam	Excellent	A little	None	Small to large	Excellent	Fair	No	Can be avoided	8
Instrument Genevas (external)	Good	No	None	Very small	None	None	Yes	Yes	9
Machine Geneva (external)	Excellent	No	None	Moderate	None	None	A little	Yes	9
Mutilated gearing	Fair to good	A little	None	Small	None	Fair	Yes	Yes	10
Cycloidal gearing	Fair to good	A little	None	Moderate	Poor	Poor	No	No	10
Differential gearing	Excellent	Yes	Clutches (sometimes)	Moderate to large	Poor	Poor	No	No	10
Clock and watch escapements (timed)	Excellent	Very high	None	Very small to small	None	None	Yes	Yes	11
Machine escapement	Good	Yes, high	Control solenoid & drive circuits or control shaft	Small	None	High	Yes, high	Yes	12
Inverse escapement	Fair	No	Drive circuits	Small	None	High	Yes	Yes	12
Clutch-brake systems	Fair to good	No	Control circuits	Moderate to large	Fair	High	With some types	With most types, yes	13
Step motor	Fair to good	No	Drive circuits	Moderate	Fair	High	No	No	14
Star wheel	Excellent	No	None	Small to moderate	Fair	Poor	A little	Yes	15
Roll cam	Good	Yes	Solenoid and drive circuits	Small to moderate	Good	High	No	No	15

Table 16–3. Input–Output Motions for Various Intermittent Motion Mechanisms

Mechanism	Input is:	Typical Input Angle During Output Dwell (Approx.)	Typical Input Angle During Output Motion (Approx.)	Typical Output Angle per Step (Approx.)	Example Shown in Figure:	Are Different-Length Steps Possible in One Output Revolution?
Variable stroke ratchet	Mech.	10ñ to 90ñ	10ñ to 90ñ	10ñ to 90ñ	7–12	Yes
Double action ratchet	Mech.	5°	15°	15ñ	7–13	No
Double action ratchet	Mech.	Few degrees	180°	33ñ	7–14	No
Reversible ratchet	Mech.	15ñ	15ñ	15ñ	7–16	No
Bi-directional ratchet	Electr.	10ñ	10ñ	30ñ	7–20	No
Multi-pawl ratchet	Mech.	2°	2°	2°	7–21b	No
Multi-pawl ratchet	Mech.	0.1ñ	0.1ñ	0.1ñ	7–23	No
Double output ratchet	Mech.	15ñ and 120ñ	15ñ and 15ñ	15° and 15ñ	7–24	No
Square ratchet	Pneumatic	Linear stroke	Linear stroke	90ñ	7–25	No
Ball ratchet	Mech.	45ñ	45ñ	45ñ	7–26	No
Electrical ratchet	Electr.	5°	5°	30ñ	7–27	No
Blade ratchet	Electr.	3°	3°	1.5°	7–28	No
Instrument ratchet	Electr.	10°	10ñ	36°	7–33	No
Solenoid ratchet	Electr.	Linear stroke	Linear stroke	36°	7–34	No
Linkage ratchet	Mech.	300°	60°	18°	7–35	No
Dual output linkage ratchet	Mech.	180°	180°	18ñ and 45ñ	7–37	No
Silent ratchet	Mech.	1ñ to 60ñ	1ñ to 60ñ	1ñ to 60ñ	7–40	Yes
Variable output ratchet	Mech.	21.8°	21.8°	5.4ñ to 21.8° (15 options)	7–41	Yes
Eccentric ratchet	Mech.	320ñ	40°	20ñ	7–42	No
Light-duty face cam	Mech.	0°	±5°	18ñ and 18ñ	8–2	No
Roller gear cam	Mech.	90ñ to 270ñ	90ñ to 270ñ	15ñ to 90ñ	8–7	No

Table 16–3 (Cont.). Input–Output Motions for Various Intermittent Motion Mechanisms

Mechanism	Input is:	Typical Input Angle During Output Dwell (Approx.)	Typical Input Angle During Output Motion (Approx.)	Typical Output Angle per Step (Approx.)	Example Shown in Figure	Are Different-Length Steps Possible in One Output Revolution?
Roller input cam	Mech.	10ℏ	170ℏ	30°	8-10	No
Stationary cam	Mech.	324ℏ 60°	36ℏ 300ℏ	36° 60°	8–11 8–12	Yes
Tschudi cam	Mech.	80°	280°	180°	8–13	No
Barrel cam	Mech.	90ℏ to 270ℏ	90ℏ to 270ℏ	90ℏ to 18°	8–19	No
Reciprocating input cam	Mech.	Linear stroke	Linear stroke	72°	8–21	No
Conjugate cam	Mech.	180° to 00ℏ	90° to 360°	45° to 360°	8-22 8–23	Yes
Helical cam	Mech.	180°	1260ℏ	180°	8–25	No
Worm cam	Mech.	180°	180°	9°	8-26	No
Spring start cam	Mech.	90ℏ	90ℏ	90°	8-28	No
4-slot external Geneva	Mech.	270ℏ	90ℏ	90ℏ	9–1	No
5-slot external Geneva	Mech.	252ℏ	108°	72ℏ	9–10	No
6-slot external Geneva	Mech.	240ℏ	120ℏ	60°	9–10	No
7-slot external Geneva	Mech.	$231\frac{1}{3}°$	$128\frac{1}{3}°$	$51\frac{1}{3}°$	None	No
8-slot external Geneva	Mech.	225°	135ℏ	45ℏ	9–10	No
10-slot external Geneva	Mech.	216ℏ	144ℏ	36°	9–10	No
12-slot external Geneva	Mech.	210°	150ℏ	30°	None	No
14-slot external Geneva	Mech.	$205\frac{5}{7}$ℏ	$154\frac{1}{7}°$	$25\frac{7}{7}°$	None	No
18-slot external Geneva	Mech.	200°	160ℏ	20ℏ	None	No
4-slot internal Geneva	Mech.	90ℏ	270ℏ	90ℏ	9–2	No
5-slot internal Geneva	Mech.	108°	252ℏ	72°	None	No
6-slot internal Geneva	Mech.	120ℏ	240ℏ	60°	None	No

Table 16-3 (Cont.). Input–Output Motions for Various Intermittent Motion Mechanisms

Mechanism	Input is:	Typical Input Angle During Output Dwell (Approx.)	Typical Input Angle During Output Motion (Approx.)	Typical Output Angle per Step (Approx.)	Example Shown in Figure:	Are Different-Length Steps Possible in One Output Revolution?
7-slot internal Geneva	Mech.	128½°	231½°	51½°	None	No
8-slot internal Geneva	Mech.	135°	225°	45°	9-11	No
10-slot internal Geneva	Mech.	144°	216°	36°	None	No
12-slot internal Geneva	Mech.	150°	210°	30°	9-11	No
14-slot internal Geneva	Mech.	154¼°	205¾°	25¾°	None	No
18-slot internal Geneva	Mech.	160°	200°	20°	None	No
4-slot spherical Geneva	Mech.	180°	180°	90°	9-3	No
6-slot spherical Geneva	Mech.	180°	180°	60°	None	No
8-slot spherical Geneva	Mech.	180°	180°	45°	None	No
Light-duty 6-slot external Geneva	Mech.	320°	40°	60°	9-15	No
Multi-roller 4-slot external Geneva	Mech.	60°	60°	90°	9-16	No
Variable dwell Geneva	Mech.	80° and 140° (alternates)	60°	90°	9-17	No
Chain drive Geneva	Mech.	90°	450°	90°	9-18	No
Slider crank Geneva	Mech.	240°	120°	90°	9-19	No
Hypocycloidal crank Geneva	Mech.	270°	90°	90°	9-20	No
Slider crank Geneva	Mech.	200°	160°	72°	9-24	No
Elliptical gear Geneva	Mech.	90°	90°	90°	9-27	No
Multilated gear	Mech.	350° to 10°	10° to 350°	10° to many turns	10-10	Yes
Long-tooth mutilated gear	Mech.	340°	380°	360°	10-13	Yes

Table 16-3 (Cont.). Input-Output Motions for Various Intermittent Motion Mechanisms

Mechanism	Input is:	Typical Input Angle During Output Dwell (Approx.)	Typical Input Angle During Output Motion (Approx.)	Typical Output Angle per Step (Approx.)	Example Shown in Figure:	Are Different-Length Steps Possible in One Output Revolution?
Mutilated gear counter mechanism	Mech.	324ñ	36°	36°	10-12	Yes
Multiple output mutilated gear	Mech.	60ñ and 60ñ	60ñ and 180ñ (alternates)	60ñ and 300ñ (alternates)	10-14	Yes
4:1 Hypocycloidal gear	Mech.	Theoretical 0°	90ñ	90ñ	10-3	No
8:1 Hypocycloidal gear	Mech.	Theoretical 0°	45°	45ñ	10-15	No
1:1 Epicycloidal gear	Mech.	Theoretical 0°	360ñ	360ñ	10-16	No
2:1 Epicycloidal gear	Mech.	Theoretical 0°	180°	180°	10-17	No
8:1 Epicycloidal gear	Mech.	Theoretical 0ñ	45°	45ñ	None	No
Grooved cam planet gear	Mech.	100ñ	260ñ	360°	10-18	Yes
Non-circular planetary gear	Mech.	60°	60°	60°	10-19	Yes
Eccentric hypocycloidal gear (non-rhtating)	Mech.	Theoretical 0°	360ñ	36ñ	10-20	No
Single input differential gear	Mech.	Theoretical 0°	180°	180°	10-24	No
Skewed block differential	Mech.	Theoretical 0°	Fraction of one, to many degrees	Fraction of one, to many degrees	10-26	No
Rack and idler gear	Mech.	180°	180°	90ñ	10-27	Yes
Segment gear	Mech.	Theoretical 0°	22½°	22½°	10-28	No
Three-gear system	Mech.	Theoretical 0ñ	360°	360ñ	10-31	No
Programmable gear	Mech.	20ñ to 340ñ	340ñ to 20°	40ñ to 720ñ	10-32	Yes
Verge escapement	Mech.	0°	16½ñ	16½ñ	11-8	No
Deadbeat escapement	Mech.	0°	13ñ	13ñ	11-13	No
Gravity arm escapement	Mech.	0°	120ñ	120ñ	11-15	No

Table 16–3 (Cont.). Input–Output Motions for Various Intermittent Motion Mechanisms

Mechanism	Input is:	Typical Input Angle During Output Dwell (Approx.)	Typical Input Angle During Output Motion (Approx.)	Typical Output Angle per Step (Approx.)	Example Shown in Figure:	Are Different-Length Steps Possible in One Output Revolution?
Tuned escapements	Mech.	0°	24°	24°	11–17	No
Simple machine escapement—two pallets	Mech. or Electr.	0°	10° to 180°	10° to 180°	12–1	Yes
Simple machine escapement—single pallet	Mech. or Electr.	0°	10° to 360°	10° to 360°	12–2	Yes
Disc escapement	Mech.	315°	45°	180°	12–6	No
Slip clutch escapements	Mech. and Electr.	Less than one, to many turns	A few degrees, to many turns	10° to many turns	12–7 12–9	Yes
Load-and-fire escapements	Mech. and Electr.	Less than one, to many turns	A few degrees	10° to 360°	12–11 through 12–15	Yes
Friction escapements	Mech.	One or more turns	720°	360°	12–17	Yes
Controlled output escapement	Mech.	300°	60°	60°	12–19	No
Variable stroke escapement	Mech.	0°	9° to 360°	9° to 360° (21 options)	12–21	Yes
Light-duty inverse escapement	Mech. or Electr.	5°	5°	18°	12–22 12–26 12–36	No
Verylight-duty inverse escapement	Mech.	300°	60°	22½°	12–29	No
Heavy-duty cam-driven inverse escapement	Mech.	Few degrees	180°	4°	12–33	No
Heavy-duty, reciprocating inverse escapement	Mech.	Linear stroke	Linear stroke	20°	12–35	No
Spring clutch	Mech.	0°, to many turns	10° to 360°	10° to 360°	13–2 13–18 13–28 13–29	Yes

Table 16–3 (Cont.). Input–Output Motions for Various Intermittent Motion Mechanisms

Mechanism	Input is:	Typical Input Angle During Output Dwell (Approx.)	Typical Input Angle During Output Motion (Approx.)	Typical Output Angle per Step (Approx.)	Example Shown in Figure:	Are Different-Length Steps Possible in One Output Revolution?
Low-cost electrical clutch (light-duty)	Mech.	0°, to many turns	90° to 360°	90° to 360°	13-4	Yes
Heavy-duty pawl clutch	Mech.	90°, to many turns	360°	360°	13-19	No
Highperformance electrically actuated clutches	Mech.	Few degrees, to many turns	Few degrees, to many turns	Few degrees, to many turns	13-21 13-22 13-24 13-31 13-34	Yes
Overrunning clutches (roller, sprag, etc.)	Mech.	0°	Few degrees, to 360°	Few degrees, to 360°	13-18 13-25 13-26 13-27 13-30	Yes
Permanent magnet stepping motor	Electr.	—	—	45° to 180° (typical)	14-10 14-12	Yes
Variable reluctance stepping motor	Electr.	—	—	15° (typical)	14-16	Yes
Slo-Syn stepping motor	Electr.	—	—	0.9° 1.8°	14-13 14-14	Yes
Electro-hydraulic stepping motor	Electr.	—	—	1.5° and 3°	14-20 14-21	Yes
Flexible-spline stepping motor	Electr.	—	—	0.45°	14-22 14-23	Yes
Ratchet stepping motor	Electr.	—	—	10° to 45°	14-28	Yes
Planar stepping motor	Electr.	—	—	0.001″	14-24 through 14-27	Yes
One-stop external star wheel	Mech.	180°	180°	360°	15-4	No
Two-stop external star wheel	Mech.	90° or 270° or other	90°	180°	15-3	No
Three-stop external star wheel	Mech.	30° or 90° or 270°	90°	120°	15-4	No
Fourstop external star sheel	Mech.	30° or 90° or 270°	90°	90°	15-4	No

Table 16-3 (Cont.). Input-Output Motions for Various Intermittent Motion Mechanisms

Mechanism	Input is:	Typical Input Angle During Output Dwell (Approx.)	Typical Input Angle During Output Motion (Approx.)	Typical Output Angle per Step (Approx.)	Example Shown in Figure:	Are Different-Length Steps Possible in One Output Revolution?
Five-stop external star wheel	Mech.	48° or 108° or 288°	72°	72°	15-4	No
Six-stop external star wheel	Mech.	30° or 60° or 120° or 300°	60°	60°	15-4	No
One-stop internal star wheel	Mech.	60° to 180°	180° to 320°	360°	15-6	No
Two-stop internal star wheel	Mech.	90° or 270°	90°	180°	15-6	No
Three-stop internal star wheel	Mech.	60° or 180° or 300°	60°	120°	15-6	No
Roll cam	Mech.	Few degrees, to many turns	36° to 360°	36° to 360°	15-8 15-9	Yes
Pin-chain drive	Mech.	240°	120°	120°	15-10	No
Linkage-belt drive	Mech.	Theoretical 0°	180°	45° to 360°	15-11 15-12	No
Four-bar linkage	Mech.	180°	180°	90°	15-14	No
Rotary solenoid	Electr.	0°	10° to 180°	10° to 180°	15-18	No
Four-piston drive	Hydraulic or Pneumatic	Linear strokes	Linear strokes	90°	15-20	No
Gleason indexer	Mech. and Electr.	—	—	Small fractions of a degree, to 360°	15-23	Yes
Hydraulic rack actuator	Hydr.-Pneum.	Linear stroke	Linear stroke	30° to 360°	15-24	Yes
Basic PRIM drive	Mech.	Less than 1°, to many turns, depending on gear ratios	Less than 1°, to many turns, depending on gear ratios	Less than 1°, to many turns, depending on gear ratios	15-25	Yes
Load-and-fire PRIM	Mech.	Less than 1°, to many turns, depending on gear ratios	Less than 1°, to many turns, depending on gear ratios	Less than 1°, to many turns, depending on gear ratios	15-26	Yes
Multiple input	Mech.	Less than 1°, to many turns, depending on gear ratios	Less than 1°, to many turns, depending on gear ratios	Less than 1°, to many turns, depending on gear ratios	15-27	Yes

Table 16-4. Partial List of Mechanisms Used in Different Applications

Application	Mechanism
Machine Tool	Cams Clutch-brakes Genevas Star wheels Steppers
Business Machines	Cams Clutch-brakes Escapements Gears Genevas Ratchets Roll cams Steppers
Instruments	Cams Clutch-brakes Gears Genevas Inverse escapement Machine escapement Ratchets Steppers
Vending Machines	Escapements Ratchets
Production Machines	Cams Clutch-brakes Escapements Gears Genevas Ratchets Star wheels Steppers

PART II—DESIGN EXAMPLE

To conclude this study of intermittent motion mechanisms, let us consider a specific design example, a progressive case history that will show how the design of an intermittent motion mechanism is related to and affected by the design of many other portions of some complete mechanical or electromechanical system. Specifically, we will consider the design of an inexpensive electromechanical printer. Intermittent motion mechanisms will be used (a) to operate the platen that performs the actual printing operation, and (b) to advance or "feed" the paper on which the printed marks are made. Although we will concentrate on the design of the intermittent motion mechanisms in this printer, we will, of necessity, consider its other elements since they determine the input-output requirements of, and the loads on, the intermittent motion devices.

As we go along, we will relate the various steps taken, to the steps in design procedure given at the beginning of this chapter.

Printer Specifications

Our first task is to define specifications for the system we are building; in this case, the printer. These will, in turn, determine the specifications for the intermittent motion mechanisms. Let us assume that Marketing or Management (hopefully with guidance from Engineering) has established the following requirements:

> The department wants an inexpensive electromechanical printer that will record the number stored in a five-digit mechanical counter. Printout will be on command when a manual button or lever is actuated, and will be very infrequent; perhaps once a day. Since the mechanical counter will be traveling at speeds of up to 1200 cpm, however, it is desired to print and feed the paper quite rapidly whenever printout is commanded. The designer of the machine to which the printer is to be attached tells us that he can provide as much as 216 degrees of "compliance" in the counter feed. This means that the printing action could stall the counter for as much as six counts during printout. The counter would then catch up again when released. As a design target, therefore, we will try to print in approximately 0.250 second, leaving ourselves a safety factor of 50 milliseconds.

$$6\,\frac{\text{counts}}{\text{printout}} \times \frac{1}{1200\,\frac{\text{counts}}{\text{min}}} \times 60\,\frac{\text{secs}}{\text{min}}$$

$$= 0.300\,\frac{\text{secs}}{\text{printout}}$$

It is desired to use standard adding-machine-paper rolls in this printer (approximately 3-inch diameter by $3\frac{1}{2}$-inch length). A sintered nylon, ink-impregnated platen is suggested to eliminate the need for ink ribbon feed mechanisms, etc., because a platen of this kind is capable of pro-

ducing many hundreds of thousands of useful impressions; ample "life" for a printer which is operated only once or twice a day.

Preliminary Definition of the Printer System

The first design step is to make some decisions regarding the locations, size, and general configuration of the counting, printing, and paper-feed mechanisms. Figure 16–1 shows a semischematic layout. The mechanical counter is mounted between two pairs of feed and idler rollers. A printing platen is located opposite the counter and is mounted on a lever. The paper roll is off to one side.

The intermittent motion drive package, shown schematically in Fig. 16–1, will have to provide mechanical outputs to operate the platen lever system and to advance the feed roll. Obviously, these two outputs will have to be sequential. We do not want to advance the paper during the actual printing operation (in some high-speed designs, of course, the paper is moved with the print wheels).

Many other printer "systems" would be possible, of course. The arrangement shown, however, would be simple and inexpensive (therefore, satisfying our basic requirements). Since we are mainly interested

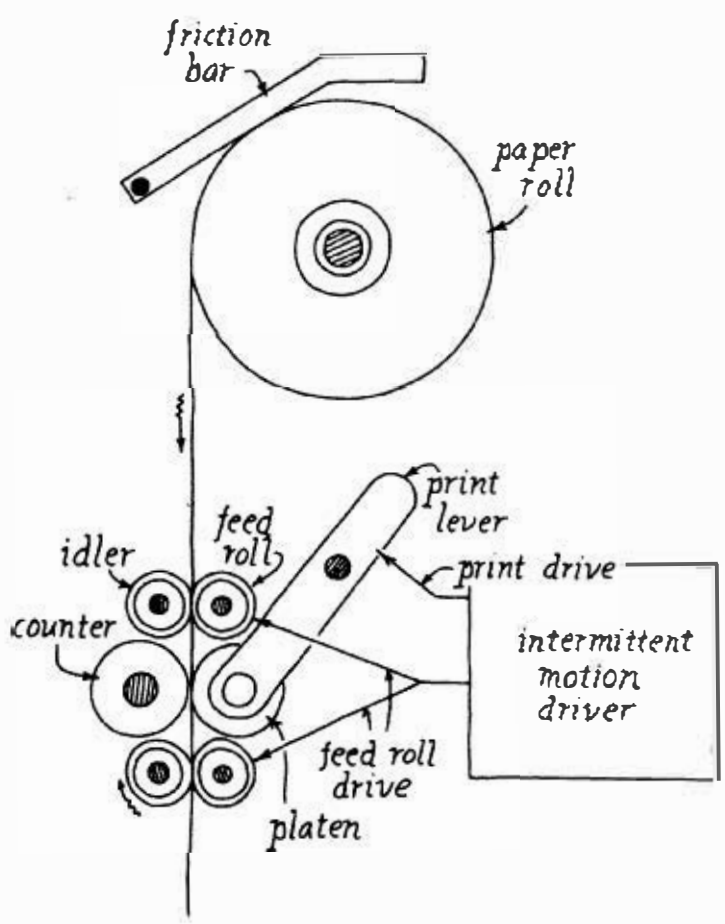

Fig. 16–1. Semi-schematic illustration of an inexpensive electro-mechanical printer: Our "design example."

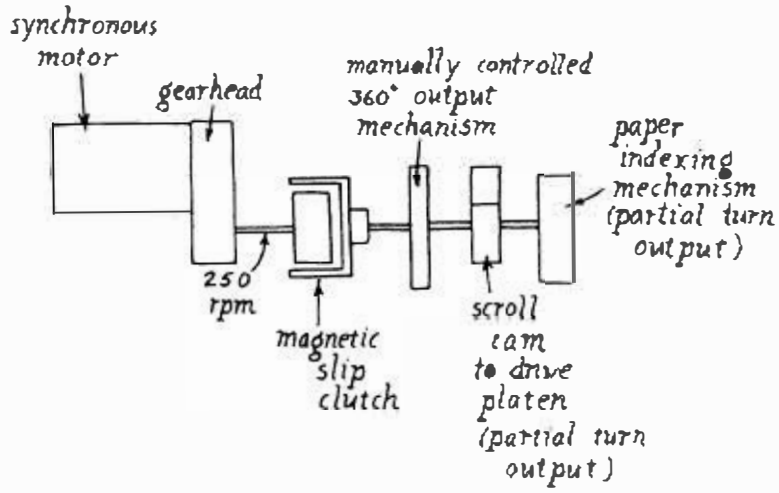

Fig. 16–2. Preliminary schematic for the intermittent motion drive system of the printer.

in illustrating the design of an intermittent motion system we need not spend too much time on refinements to the printer, *per se*.

Preliminary Definition of Intermittent Motion Drive System

The next step is to come up with a preliminary definition of the intermittent motion drive system. To repeat: two separate outputs are needed, a printing motion followed by a paper feed motion. These two motions are to be initiated by a manual control operation of some kind; someone either pushes a button or moves a control lever. The fact that the control input is manual, also means two things: First, the input will be erratic; sometimes fast, sometimes slow; sometimes complete, sometimes incomplete; sometimes smooth, sometimes hesitating; etc., depending upon the operator. Secondly, input forces will be small since a pushbutton or small lever requiring more than four pounds of actuation force is uncomfortable and difficult to use.

Figure 16-2 is a schematic of one possible intermittent motion drive system. A constant speed, synchronous, gearhead motor runs continuously, producing a steady output of 250 rpm (a little more than 4 revolutions per second or 0.240 second per revolution, slightly faster than our goal, but acceptable). This output is fed through a magnetic drag-cup slip clutch. This clutch applies a steady torque (of an, as yet, undetermined magnitude) on a first intermittent motion mechanism that is manually controlled and which will produce 360 degrees of output motion whenever it is commanded to do so. Most of the time, of course, the clutch slips and there is no output motion. The output of this 360 degree intermittent motion device drives two other mechanisms:

a cam for actuating the printing platen, and a second intermittent motion mechanism for advancing the paper feed roll. These two outputs will be sequential, but we do not yet know how much of the 360-degree output produced by the first intermittent motion mechanism should be used for the cam and how much will, therefore, be left for the paper feed. To determine this, we must go back and study the printer system in greater detail.

Notice that we first took a rough cut at the printer, then an intermittent motion system was sketched out, and now we are going back to the printer. You will find this printer-indexing mechanism–printer cycle repeating itself over and over, as we proceed. Only if you are working in a very large company and on a design effort that has been broken down by a systems engineer or someone into clearly defined isolated parts will you be designing just intermittent motion mechanisms without influencing or being influenced very much by the design of the remainder of the system.

Further Details—Printer System

It takes a considerable amount of pressure to make a successful mark in a typical printer. Ink-impregnated platens require approximately 1000 psi in a "squeeze printer." (Impact hammer printers require higher pressures because contact times are much less.) With the size and style of type planned for this particular design, 1000 psi works out to be approximately 10 lbs per wheel. The platen, therefore, will have to exert a total of 50 pounds-force on the five-wheel mechanical printer.

Since the printer is to be a relatively low-cost device we will want to use a fairly small, inexpensive motor. Judging from past experience, it is going to require a fair amount of mechanical advantage to produce 50 pounds-force on the platen with such a motor, thus, almost immediately, we go to a compound lever system as shown in Fig. 16–3. To gain additional mechanical advantage this lever is driven with a scroll cam having as gentle a slope as possible. This means we want to take up as much of the available 360 degrees as is feasible with the scroll cam, and crowd the paper feed portion of the cycle into as short an angle as possible. The height of the character on the printing wheel is 0.125 inch. A paper feed distance of 0.300 inch, therefore, would seem proper. This is approximately the length of a 60-degree arc on the feed roll. Taking this as a clue, we leave 60 degrees of motion of the intermittent

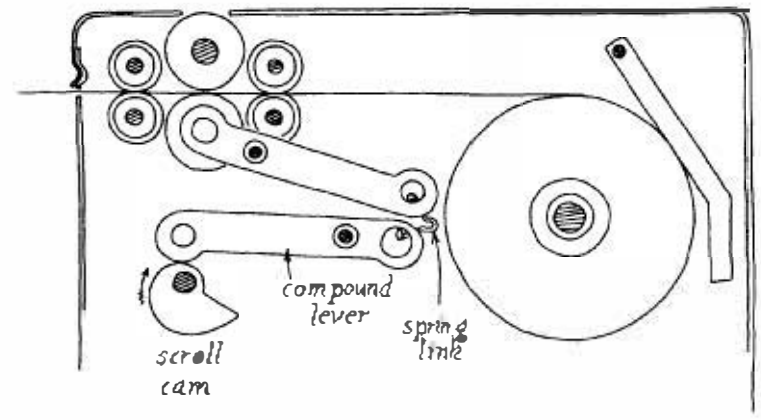

Fig. 16-3. Refinements of the printer layout, showing the compound lever system used to operate the printing platen.

motion drive assembly for paper feed and use a full 300 degrees of motion for the scroll cam.

Do not feel that there is any magic behind these various "numbers." We are groping toward a set of design specifications that will be mutually consistent, using intuition and experience (rather than "equations") to establish possible numerical values.

Detailed Specifications for the Intermittent Motion Mechanisms

Now that tentative input and output requirements for the two intermittent motion mechanisms have been defined we have arrived at Step 1 of our "Design Procedure for Intermittent Motion Mechanisms," as defined earlier in this chapter. As can be seen, a fair amount of design work has been done to arrive at the point where we can "define the primary problem" for the indexing mechanisms themselves.

In accordance with the schematic of Fig. 16-2, we have the following two indexing mechanisms to specify in detail:

A. One Turn (or 360-degree Output) Mechanism

1. Indexing rate required: 250 steps per minute
2. Indexing accuracy required: Not critical—perhaps, plus or minus 5 degrees
3. Dwell-motion pattern required: Asynchronous operation; therefore, long or short dwell periods followed by rapid indexing; output motion of 360 degrees each actuation.
4. Size of load: Medium to light
5. Cost situation: Medium to low cost
6. Secondary considerations: Manual control inputs. These will be erratic and will often occupy more time than the 0.2 second required for each output motion.

B. Paper Feed Mechanism

1. Indexing rate required: 250 steps per minute
2. Indexing accuracy required: Not critical—perhaps plus or minus 5 degrees
3. Dwell-motion pattern required: Output should dwell for 300 degrees of input motion; output should then rotate approximately 60 degrees for the next 60 degrees of input motion.
4. Size of load: Medium to light
5. Cost: Medium to low cost
6. Secondary problems: Moderate size.

Selection of Specific Intermittent Motion Mechanisms

We are now ready to select candidates for these two indexing jobs, perhaps by reference to Table 16-3. Taking the one-turn mechanisms first, list as follows, all the choices from Table 16–3 that produce 360 degrees of output motion which are usually designed to run asynchronously:

Type of Mechanism for 360° Output	Input Motion During Output Dwell	Input Motion During Output Motion	Output Motion
Simple machine escapement	0°	10° to 360°	10° to 360°
Load-and-fire escapement	<1° to many turns	Few degrees	10° to 360°
Friction escapement	Many turns	720°	360°
Variable-stroke escapement	0°	9° to 360°	9° to 360°
Spring clutch	0° to many turns	10° to 360°	10° to 360°
Low-cost electr. clutch	0° to many turns	90° to 360°	90° to 360°
Heavy-duty pawl clutch	90° to many turns	360°	360°
High performance Electr. clutch	Many turns	Many turns	Many turns
Overrunning clutches	0°	Few to 360°	Few to 360°
Roll cam	Few degrees to many turns	36° to 360°	36° to 360°
Gleason indexer	...	...	1° to 360°
Hydraulic rack actuator	Linear	Linear	30° to 360°

There are also a number of possible choices in Table 16–3, to be listed for the paper feed mechanism:

Type of Mechanism for Paper Feed	Input Motion During Output Dwell	Input Motion During Output Motion	Output Motion
Linkage ratchet	300°	60°	18°
Eccentric ratchet	320°	40°	20°
Stationary cam	324°	36°	36°
Mutilated gear	324°	36°	36°
Programmable gear	20° to 340°	340° to 20°	40° to 720°
Disc escapement	315°	45°	180°
Controlled output escapement	30°	60°	60°
Very-light-duty inverse escapement	30°	60°	22½°
6-stop external star wheel	30°	60°	60°
3-stop internal star wheel	300°	60°	120°
Roll cam	1° to Many turns	36° to 360°	36° to 360°
PRIM	1° to Many turns	1° to Many turns	1° to Many turns

The next job is to select one mechanism from each of the new listings. Let us consider the one-turn (360°) mechanism first. At least to start with, the roll cam, Gleason indexer and the various clutch systems can be eliminated on the basis of cost. The hydraulic rack actuator can be eliminated because we do not have hydraulic or pneumatic energy available. I have the feeling that a simple escapement will be adequate and will be the most economical approach, thus "machine escapement" is my choice for the one-turn mechanism.

We should note in passing that there are a number of other mechanisms listed in Table 16–3 which produce 360 degrees of output motion. These include cams, mutilated gears, external star wheels, belt drives, and the PRIM mechanisms. These have not been included in the primary list because all of them are designed to run continuously (synchronously). However, any one of them could be made asynchronous by the addition of a clutching mechanism, but I would hope to avoid this complexity in our low-cost printer. In many other design situations, however, the distinction between "normally syn-

chronous" and "normally asynchronous" would be completely unimportant.

First choice for the paper feed mechanism would be the 6-stop external star wheel, since the input and output motion characteristics are exactly what we are looking for, the mechanism is relatively inexpensive, and it does not introduce impact. Ratchets and mutilated gears would also work, but would involve rapid acceleration and/or impact. We are attempting to drive paper (with friction rolls) with the paper feed indexing mechanism and impact could result in serious slip problems. Therefore, let us select the external star wheel as a first cut.

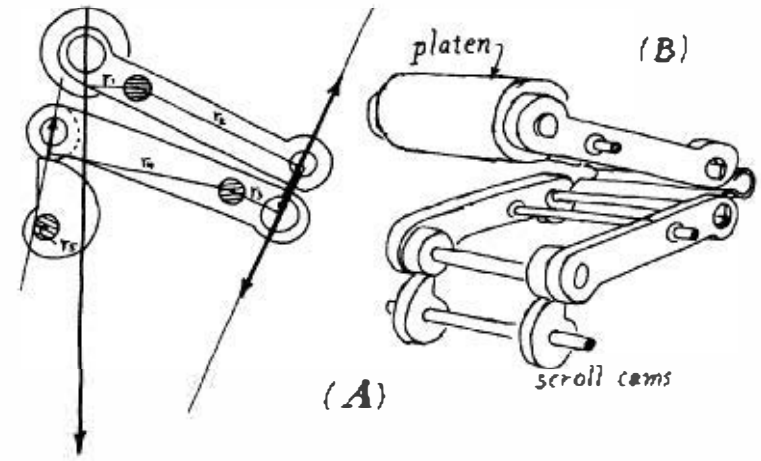

Fig. 16-5. (*Left*) Force study of platen lever system. (*Right*) Sketch of platen lever system.

Design of 360-degree Escapement

Now that candidates for the intermittent motion mechanisms have been selected, we are ready to try to incorporate these mechanisms into the design. We have, therefore, reached Step 6 in the procedure described at the beginning of this chapter.

After some preliminary sketching and several layout studies (see Fig. 16-4A, B, and C), we might arrive at the single-lever escapement shown in Fig. 16-4D. We would encounter some difficulty in designing an escapement which could be controlled manually (and, therefore, at an erratic rate) and which would still be a "true" escapement, permitting only one escape per actuation. But the mechanism shown at D, in the illustration, does this. Even if the operator should move the control (escape) lever so slowly that the scape pin nearly completes its revolution before the lever has been moved through a full cycle (which is very likely with manual control of a device producing one turn in 0.240 second), the pin on the scape wheel will strike a "safety block" preventing multiple-turn output. Either completing the stroke of the scape lever or moving it back to its original position will complete the 360-degree output motion, and trap the scape wheel. The device appears then, to be able to accommodate operator misuse or abuse.

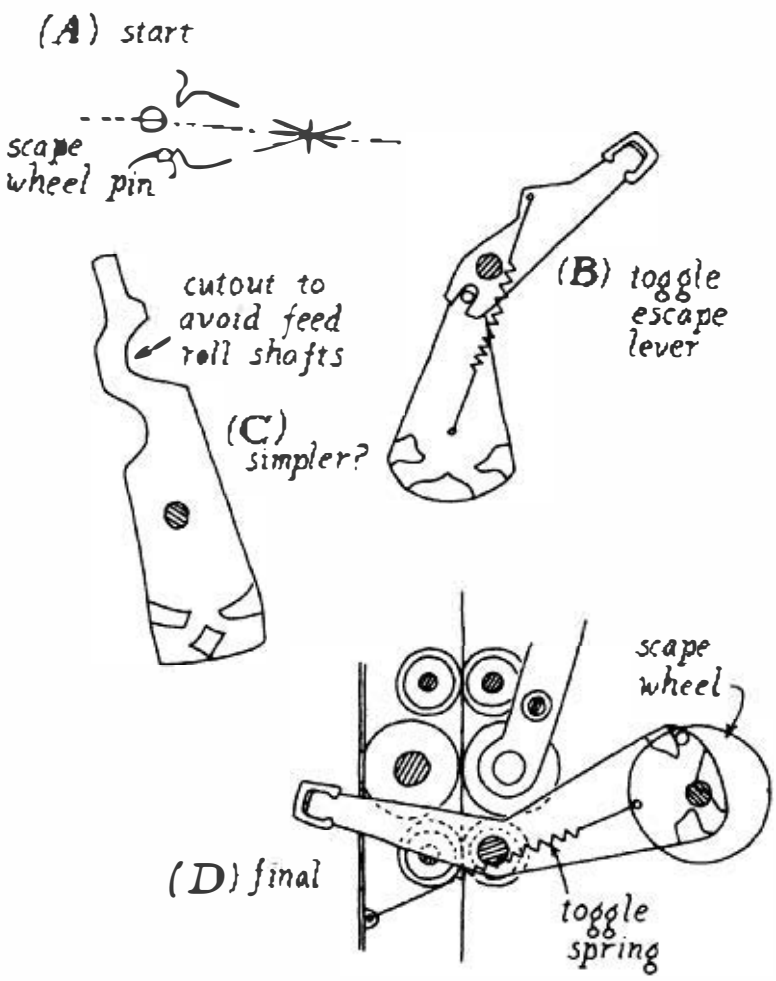

Fig. 16-4. Preliminary development (Sketch A, B, and C) of the one-turn (360°), manually operated escapement. Sketch (D) is the final version.

Six-stop Star Wheel Configuration

No specific design effort is required for the star wheel at this point in the design process, since its configuration is determined by its selection. We are, therefore, now free to move on to studies of the loads which will be placed on the two mechanisms. To do this, we must return, once again, to a consideration of the entire printer.

Load Calculations

Figure 16-5 shows the forces on the compound lever at the peak of the printing cycle. Forces are relatively light until the platen contacts the counter-

print wheel at which point they rapidly build up until 50 pounds-force is generated against the wheel assembly. This is a squeeze operation and there is no impact involved. The vector diagram (A) indicates the direction and magnitude of these forces, based on simple lever theory. In the diagram the pivots for both levers are assumed to produce little friction since it would be cheaper to provide low-cost ball or roller bearings here than to provide the heavier drive motor, which would be required to overcome bearing friction. As lever speed is small, the number of actuations required is very small (short life requirement). Factors such as preloading and precision are not required, and bearings costing only a few cents can be used.

A bearing can also be used for the cam follower. Using the methods described in Figs. 1–10 and 1–11, we can determine the resultant force exerted by the scroll cam on the first lever if we used a frictionless bearing, and compare it to the resultant produced on the same cam if we used a non-rotating follower having a maximum coefficient of friction of 0.5, for example. This comparison is shown in Fig. 16-6. As you can see, using an inexpensive ball bearing for the follower makes a significant difference in the effective ratio of the first lever.

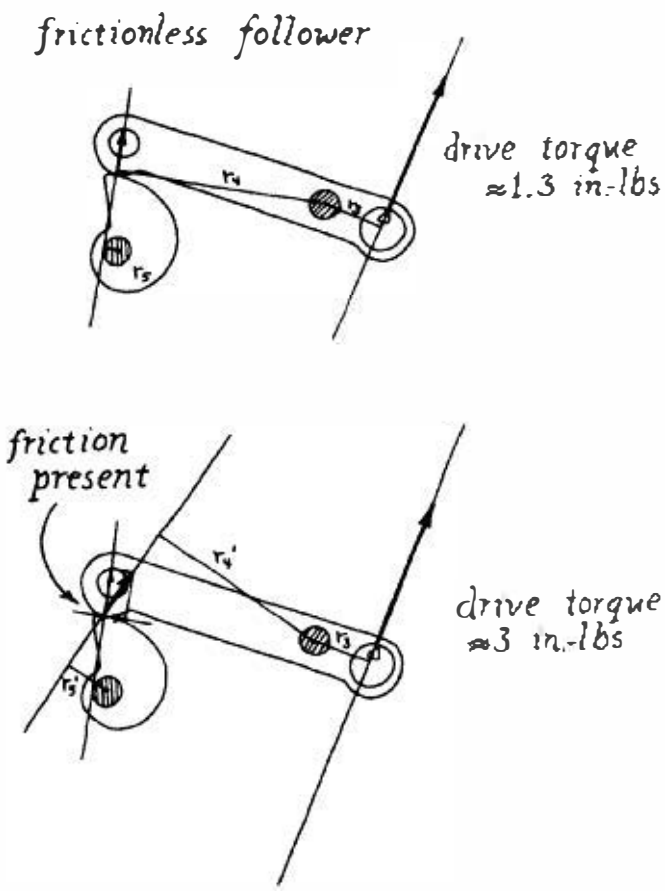

Fig. 16–6. Details of force vectors on the scroll cam follower, platen lever system, with a ball bearing follower and a non-rotating follower. Also, scroll-cam drive torque required is shown in each case.

The construction of Fig. 16–6 also reveals the scroll-cam drive torque in each case. With a plain follower the torque is about 3 in.-lbs; with a frictionless bearing it is about 1.3 in.-lbs. This is our first load calculation and we should recognize that it is only a crude approximation of the actual force. In spite of the fact that we have used frictionless bearings for the lever pivots, there will inevitably be friction in this lever system. The spring rate of the clip which connects the two levers will vary; a return spring of some sort will be required on the follower lever; dimensions will change; platen hardness will vary; etc. Nevertheless, this calculation is adequate for our present purposes.

It would be very nice if the torque required for the paper feed portion of the cycle were comparable to that required for the printing portion of the cycle—since drastic and sudden changes in torque mean rapid acceleration or deceleration—and we have seen how this can lead to vibration, impact, and general instability in most mechanisms. Our next step, therefore, will be to calculate the torque required for paper feed to see whether or not it is compatible with the printing torque.

Paper Feed Load

There are two loads involved in the paper feed. As can be seen in Fig. 16-1, a friction bar has been mounted beside the paper roll to dampen its motion and prevent the roll from coasting after it is indexed. As a first approximation we have shown a solid aluminum bar that would weigh approximately five pounds. This presumably would be replaced in a final design with a thin, spring-loaded plate. Estimating a maximum coefficient of friction of approximately 0.4, we can estimate a friction drag force of approximately 2 lbs. (See Fig. 16–7.) This force will be relatively independent of the diameter of the paper roll (although the torque exerted by the bar on the roll will, of course, vary as the diameter changes).

Ignoring further friction forces in the system, the only other load exerted on the intermittent motion drive during the paper-indexing portion of the cycle will be inertial loads. To determine these we must compute the inertia of the feed and idler rolls, the paper roll, and the gear train that connects the intermittent motion driver to the paper feed rolls. Since all the parts are cylindrical this is a relatively

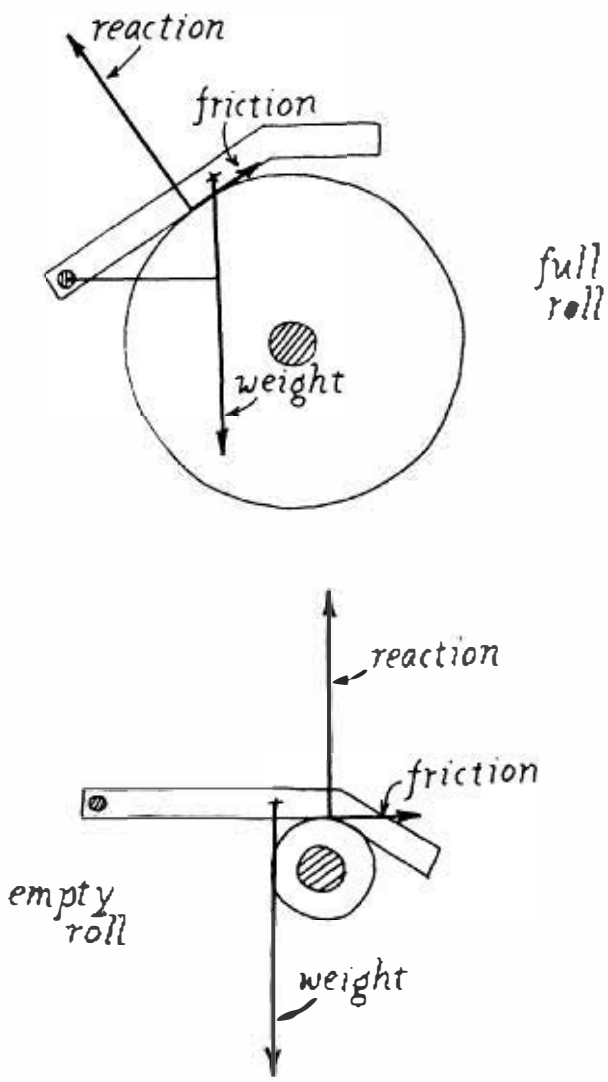

Fig. 16–7. Drag forces produced on paper roll by a friction bar.

easy task. (See appendix for inertia formulas.) Results are tabulated below:

Part	Inertia
One feed roll	0.4×10^{-4} slug-ft²
The paper roll	2.7×10^{-4} slug-ft²
One connecting gear	0.006×10^{-4} slug-ft²

There are two feed rolls and two idler rolls; all four are identical in construction, thus, the inertia given for the feed roll must be multiplied by four to get the total system inertia for these parts. There are three connecting gears, plus the output member of the star wheel whose inertia we can assume is equivalent to that of one gear; so the gear inertia must also be multiplied by four to get a rough approximation of the total inertia contributed by these members. Notice that the gears are all of equal size, thus we do not have to increase or decrease their effective inertia (or that of the feed rolls to which they are connected) by a multiplying ratio (see the section in the appendix, on inertia calculations involving gear trains, if this statement is unclear).

There is a "gear ratio" involved, however, in computing the inertia of the paper roll. The feed rollers, which are driving the paper, are $\frac{3}{4}$ inch in diameter and rotate 60 degrees with each step. The paper roll is approximately 3 inches in diameter and is pulled by the paper. The full paper roll will, therefore, turn only $60° \div N$; N being the ratio of the diameter of the paper roll to the diameter of the feed roll. And the inertia of the full paper roll as it affects the drive system will be $1/N^2$, or 1/16 times the inertia of the paper roll about its own axis. This means that the reflected inertia of the paper roll on the feed roll and intermittent motion mechanism drive system is:

$$\frac{2.7 \times 10^{-4}}{16} = 0.17 \times 10^{-4} \text{ slug-ft}^2$$

Combining all these inertias, we get a total system inertia of:

$$\begin{array}{r} 1.60 \times 10^{-4} \text{ slug-ft}^2 \\ 0.17 \times 10^{-4} \text{ slug-ft}^2 \\ 0.024 \times 10^{-4} \text{ slug-ft}^2 \\ \hline 1.794 \times 10^{-4} \text{ slug-ft}^2 \end{array}$$

Since the calculations are rough, and ignore some friction factors, etc., let us call this 2×10^{-4} slug-ft² to be safe.

Determining inertia of the feed system does not, of course, determine the torque required to index it. To do this we must determine the acceleration of this inertial system and then find torque by using the familiar equation:

$$\tau = I\alpha$$

Motion Curves

To determine the acceleration of the feed system we must construct motion curves for the mechanism which is producing this motion, namely, the six-stop star wheel. We start by making a layout of the star wheel, then some paper or plastic cutouts of input and output mechanisms. Next, assuming constant input speed (which we would have with a synchronous motor drive as long as we do not exceed the capacity of the slip clutch), we construct a displace-

ment-versus-time curve for the star wheel. Such a curve is shown in Fig 16-8. Notice that we have used input displacement rather than time for the horizontal axis. As explained in Fig. 2-9, this is frequently more convenient in layout work, and we can convert displacement to time later on if the input is running at constant velocity, as it is here. A simple calculation shows that 60 degrees of input is equivalent to 40 milliseconds when the input speed is 250 rpm. We also must calculate the output displacement (60 degrees) in radians: 60 degrees equals 1.05 radians.

We now use graphical differentiation to derive velocity and acceleration curves for this mechanism.

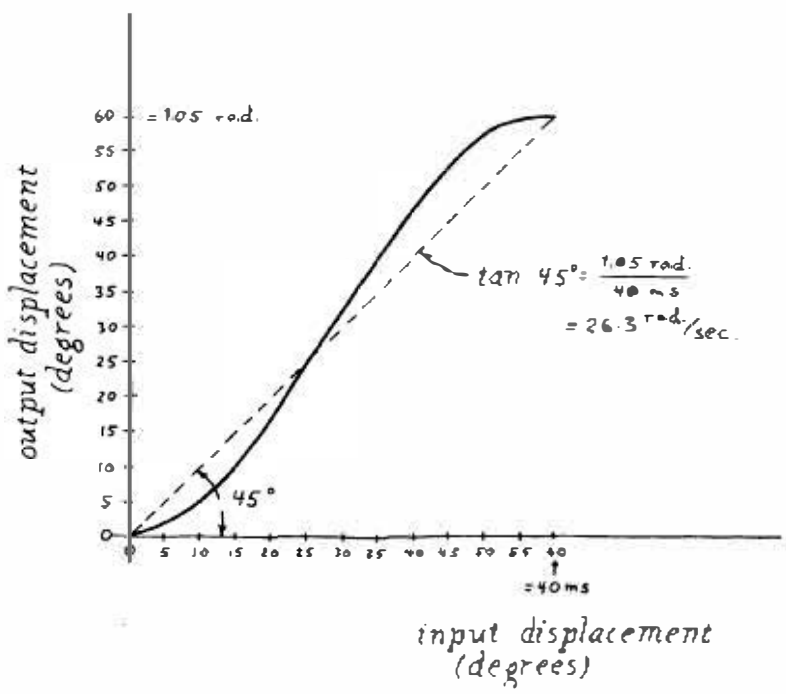

Fig. 16-8. Output displacement versus input displacement for the six-stop star wheel. The construction to determine the vertical scale of the velocity curve is also shown.

These are shown in Figs. 16-9 and 16-10. As in Chapter 2, I must emphasize that curves obtained in this manner are approximations only. Nevertheless, they are very useful for roughly estimating the magnitude of peak velocities and accelerations in a given system.

The vertical axes for the velocity and acceleration curves are given in terms of tangent or slope. We are interested in knowing the peak acceleration of the system in terms of radians/sec², and so, must convert these slope values to the proper units. To get the correct velocity scale we determine the velocity represented by a tangent of 1.0 (slope angle of 45 degrees) on the displacement graph. This equals:

$$1.05 \div 40 \times 10^{-3} = 26.3 \text{ radians/second}$$

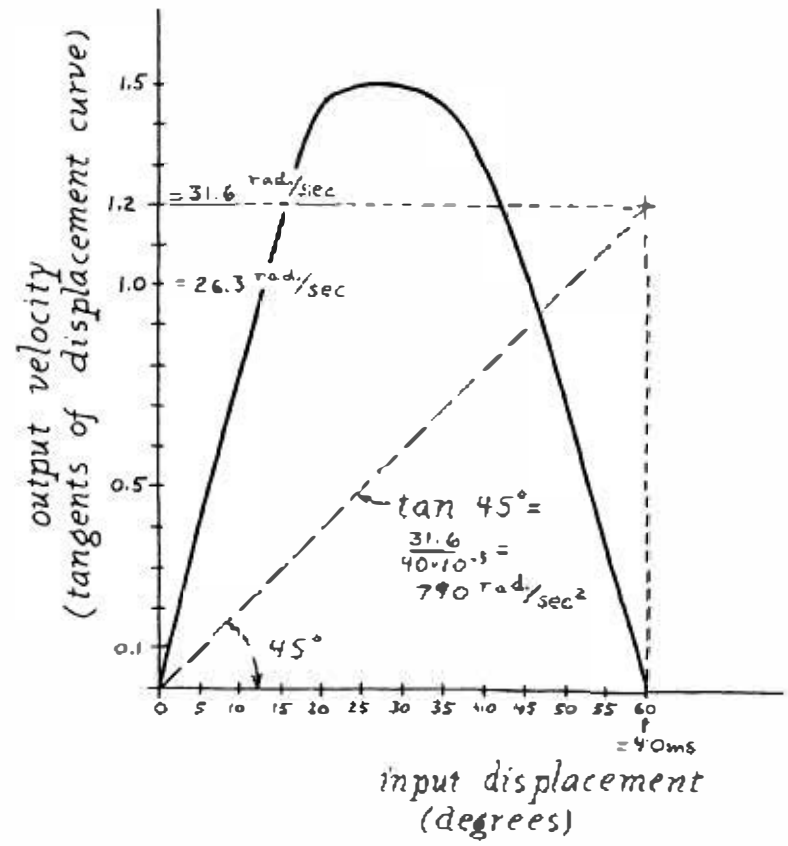

Fig. 16-9. Output velocity versus input displacement for the six-stop star wheel. The construction to determine the vertical scale of the acceleration curve is also shown.

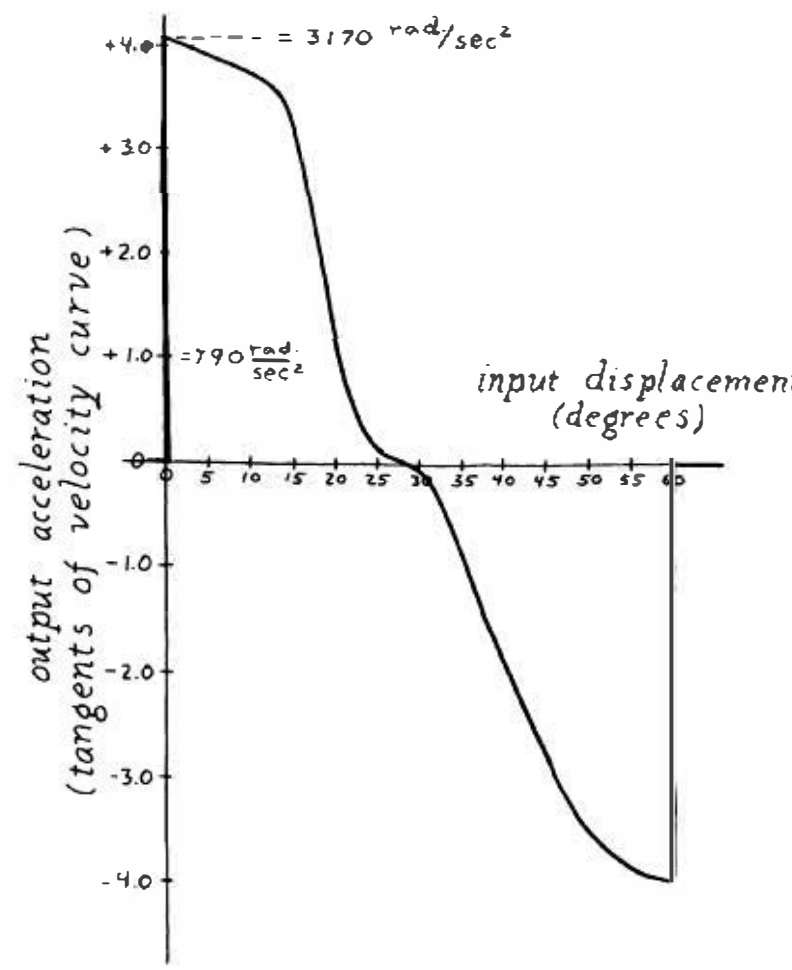

Fig. 16-10. Output acceleration versus input displacement for the six-stop star wheel.

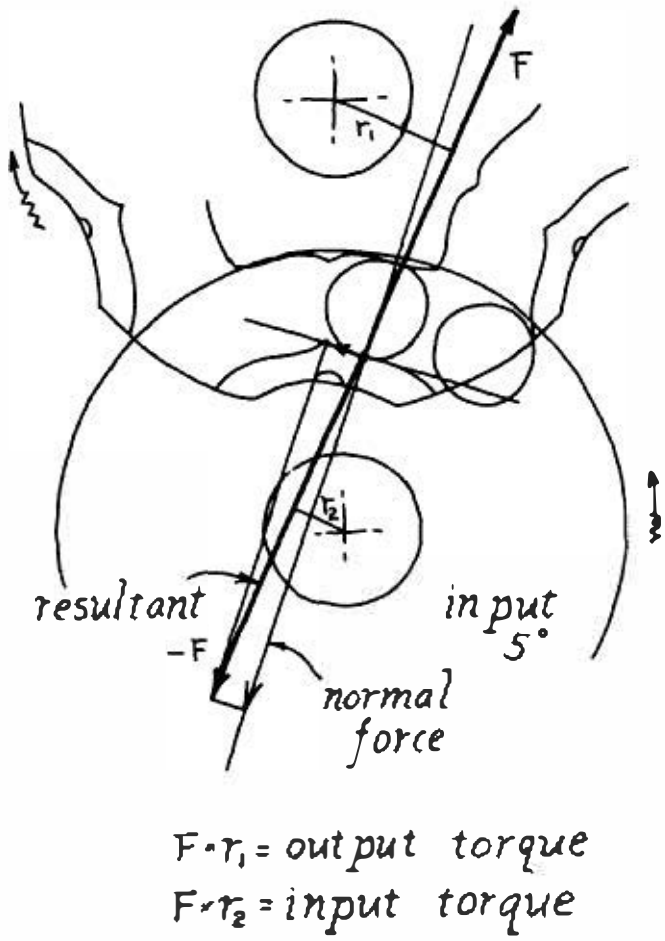

Fig. 16–11. Analysis of the input torque required by the star wheel after the driver has rotated five degrees from start of motion cycle. The geometry of the drive determines the direction of the forces on both members (we have to make an assumption regarding the coefficient of friction). This determines the "lever arms" for input and output. Our previous output torque calculations now allow us to determine the magnitude of the forces and hence, input torque. (See Fig. 1–12.)

This tells us that "1.0" on the vertical axis of the velocity curve represents a velocity of 26.3 radians/sec. On this same scale 1.2 units would represent a velocity of 1.2/1 × 26.3, or 31.6 rad/sec.

Making a similar calculation now on the velocity curve (determining what a 45-degree slope is equal to, in acceleration terms) we find that:

$$\text{Tangent of } 45° = 31.6 \div 40 \times 10^{-3}$$
$$= 790 \text{ radians/second}^2$$

So "1" on the vertical axis of the acceleration curve represents an acceleration of 790 radians/second². The peak slope on the acceleration curve is 4.01 in "slope units." This must correspond to:

$$\frac{4.01}{1} \times 790 = 3{,}170 \text{ radians/second}^2$$

The accelerations at other input angles (or times) can now be determined in a similar fashion.

We can now multiply the accelerations at points of interest by the inertia of the system to determine the total torque required to overcome the inertia of the paper feed system For example:

$$\text{Max. torque} = I\alpha$$
$$= 2 \times 10^{-4} \times 3170$$
$$= 6.34 \times 10^{-1} \text{ ft-lbs}$$
$$= 7.6 \text{ in-lbs}$$

In addition, we must supply torque to overcome the frictional drag produced by the friction bar on the paper roll. We estimated that this produced a 3-lb drag force, which would be transmitted through the paper to the $\frac{3}{16}$-inch radius feed roll where it would produce a torque of $\frac{3}{16} \times 3 = 0.563$ in-lbs. (Alternately, we could calculate the drag torque on the paper roll and relate this to input torque required, by applying gear ratio N, again.)

Total peak drive torque required, then, is approximately 7.6 + 0.563, or 8.2 in-lbs.

At first glance, then, we apparently need almost three times as much drive torque to index the paper roll and the associated paper feed system, as would be needed to operate the platen during the printing cycle; but this is not true. What we have just calculated is the torque we must produce in the *output* of the six-stop external star wheel to index the system. We must now calculate the torque required from the star wheel input to produce this amount of

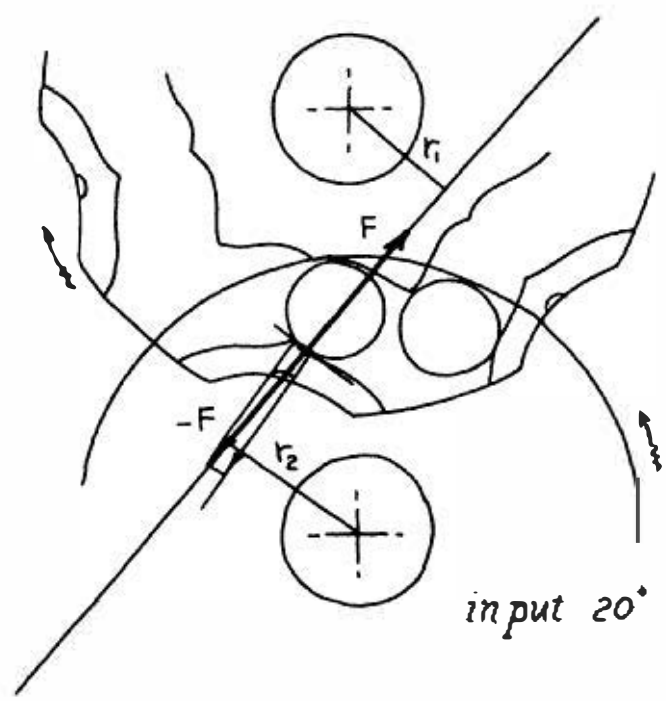

Fig. 16–12. Analysis of input torque requirements of the star wheel after the driver has completed twenty degrees of the input motion portion of the cycle.

output torque; again using the type of vector analysis shown in Figs. 1–10 or 1–12. When making such an analysis it is best to study several different positions of the mechanism to be sure that you have not overlooked the peak torque point.

Figures 16–11, 12, and 13 show three torque constructions for the star wheel. We have assumed a coefficient of friction of only 0.1, since we assume the drive pins in this star wheel are miniature rollers, and experience tells us the friction in such a system is low. Notice that Figs. 16–11 and 16–12 represent various positions of the star wheel during the acceleration phase of the indexing motion, while Fig. 16–13 represents the end of the deceleration phase. Notice also that the peak torque required of the input member is considerably less than that produced in the output member. At first glance this seems impossible, until one recognizes that the peak torque in the output is generated at a time when the output is moving very slowly, at nearly zero velocity, in fact. (At the very beginning and the end of the indexing cycle.) The velocity ratio between input and output is at a maximum, therefore, when output torque requirements are greatest, and we have, in effect, a large "gear ratio" when we need it the most. When input and output of the star wheel are moving at essentially the same velocity (in the middle of the indexing cycle) output acceleration is 0, or near 0, and drive torque requirements are correspondingly low.

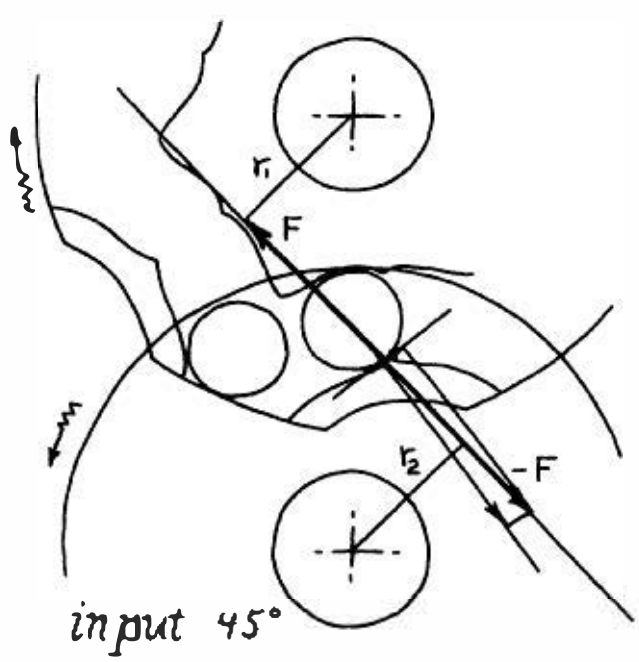

Fig. 16–13. Analysis of drive torque requirements of the six-stop star wheel after the driver has completed 45 degrees of the input portion of the cycle. Note that we are now dealing with a negative torque (deceleration).

As a result of a complete analysis of the sort described and illustrated above, we would discover that the peak drive torque required is approximately 3 in.-lbs, which is identical to the torque required to operate the printing platen when we used a non-rotating follower (Fig. 16-6). Such a follower, therefore, should probably be used to smooth drive torque requirements. Using a ball bearing follower would result in a sudden torque increase after 300 degrees of input motion.

Reconsideration of Intermittent Motion System

We now have a fairly good idea of the requirements of the intermittent motion drive system. In addition to the original specifications, we now know what loads will be imposed on the driver. And this raises several problems: our calculations indicate we need approximately 3 in-lbs to operate the platen or the feed mechanism. To be safe, we should probably provide a slip clutch with 4 in-lb capability. This is a lot of torque for a small magnetic-drag-cup slip clutch. We will probably have to use a friction-disc slip clutch. Another problem: 4 in-lb. of slip continuously at 250 rpm works out to be approximately 16 watts of power dissipation. The original intention, to let the motor run continuously and the clutch slip continuously, despite printing only once a day, looks pretty silly if this much power is involved. We should probably turn off the drive motor in-between printout commands, reducing power loss and clutch wear considerably.

At this point the original indexing system concept could be abandoned altogether, and perhaps we could look for a clutch-brake system as a replacement for the entire synchronous motorslip clutch-escapement train. (Step 7 in our Design Procedure.) I would still be concerned about the cost of the clutch-brake approach, however, and suggest instead, that we place a small flap or cover over the button or lever used to actuate the escapement. The operator must lift this flap to get at the escapement control, and the act of lifting can be used to actuate a switch to start the motor. An on-off switch would have to be provided for this printer in any event, so this design modification does not add significantly to the cost of the system. By actuating the switch with a flap of this kind, we give the motor time to start and attain full speed before the operator can reach and operate the escapement. Only a fraction of a second will be required, but this is too much time to try to build it into the 0.240 second available

for the print cycle; we must get the motor started first.

The high torque required by the system causes one additional concern. The original escapement design (Fig. 16-4) shows a small-diameter pin being used as the scape tooth on the scape wheel. I would be very concerned about the life of such a pin under a 4 in-lb load. The pin, in fact, is located at about 0.6-inch radius on the wheel, and would, therefore, see a static force approaching 7 lbs each time it brings the system to a stop. Furthermore, since some inertia is involved, the 7 lbs would be increased by impact. Also, the escapement should be redesigned to provide a much sturdier "tooth." Judging from the difficulties experienced with a 360-degree escapement (whose geometry dictated a small pin), we

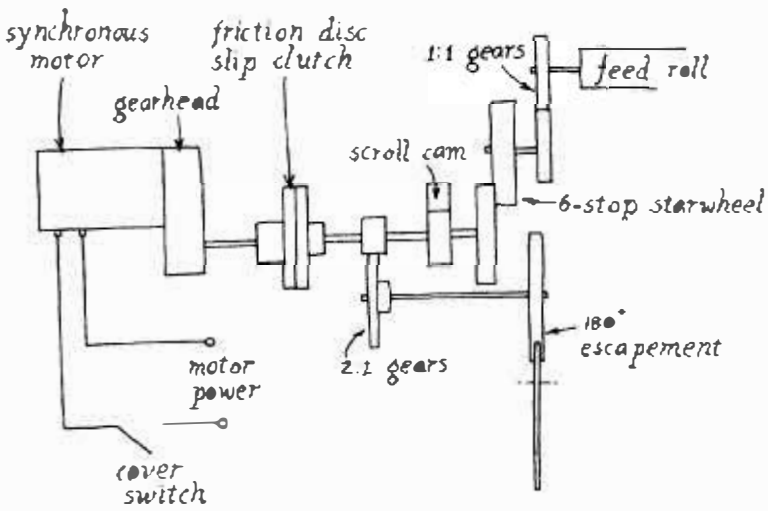

Fig. 16-14. Revised schematic of the intermittent motion drive system showing the additions of a cover switch for the motor and a two-to-one gear ratio between the control escapement and the rest of the system.

should, instead, probably try for a 180-degree escapement, geared up two-to-one to the rest of the system. We then will be able to use a conventional escape tooth rather than a pin.

A schematic of the revised indexing system accommodating the new type of slip clutch, the cover switch for the motor, and the 180-degree escapement is shown in Fig. 16-14.

Notice again, that these changes in the indexing system have been dictated by the requirements of the total system design. Perhaps the entire printer could be redesigned to reduce drive torque requirements and make it possible for us to use the original indexing system; however, this would be using the ship to steer the wheel. In most design situations we will probably do what has been done here—modify the indexer to accommodate the machine.

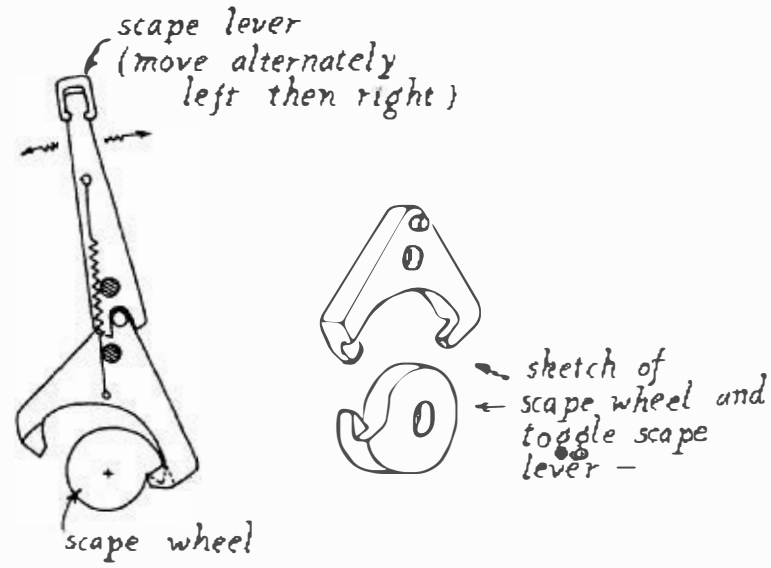

Fig. 16-15. One possibility for a 180-degree output, manually operated escapement for the printer.

Redesign the Escapement

Figures 16-15 and 16-16 show two new escapement designs, each producing 180 degrees of output motion, each very tolerant of variations in the speed and duration of input control stroke, and each involving scape wheel and lever teeth of significant size and, therefore, of significant strength. Note that in going from a 360-degree output to 180 degrees we have, of necessity, doubled the torque which must be controlled by the escapement; this is an undesirable change. But the gain in scape-wheel tooth

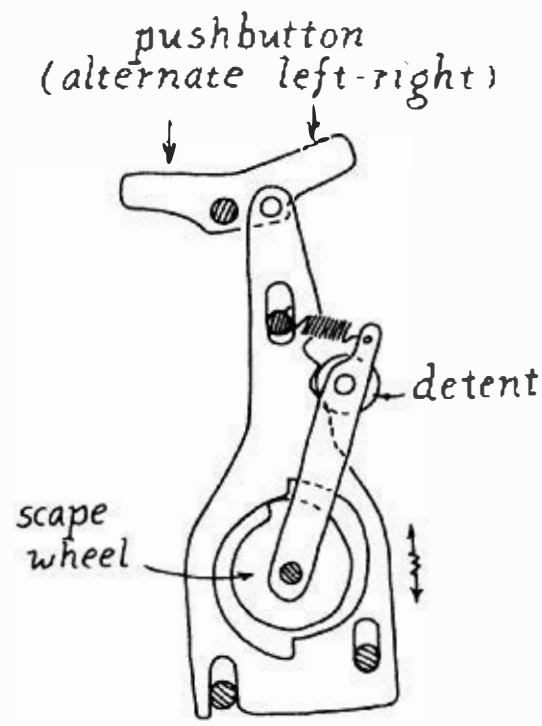

Fig. 16-16. A second 180-degree output, manually operated escapement. Either this design or that of Fig. 16-15 would probably be acceptable for the printer design.

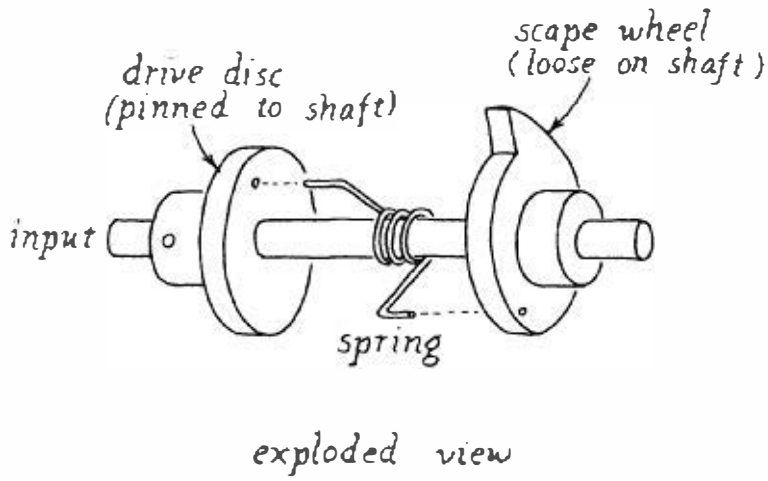

Fig. 16–17. Showing a possible method of providing some compliance between the scape wheel and the rest of the system, to reduce impacts in the escapement.

strength is even greater than the increase in torque and thus, more than compensates for this change. It is something to consider a little later, however.

Both escapements shown in the illustrations are "deadbeat" escapements; the scape wheel does not have to back up when the scape lever is actuated. In the case of Fig. 16–15 this is achieved by putting a proper radius on the scape wheel; in the case of Fig. 16–16 we achieve it by using a reciprocating scape lever which is extracted radially.

Note that in Fig. 16–15 the requirement for a deadbeat escapement necessitates the use of a two-level scape wheel tooth. This requirement somewhat complicates the shape of the scape wheel and scape lever, although these pieces could still readily be made of powdered metal, or could be cast or machined. Personally, I am inclined to favor the mechanism of Fig. 16–16. Either one, however, would probably be satisfactory.

As mentioned before, the fact that the torque controlled by the escapement has been doubled is some cause for uneasiness. In order to reduce impacts on this part, it might be desirable to place some compliance between the scape wheel and the slip clutch, as suggested by Fig. 16–17. The scape wheel teeth would still control the same static force, but the force would be applied gradually, impact effects would be eliminated, and the life of the mechanism would undoubtedly be extended. The cycle time would not be increased.

One further consideration relating to the escapement must be the amount of force required to actuate it. Assuming a coefficient of friction of approximately 0.5 (which is on the high side and could presumably be reduced by periodic lubrication of the escapement), and assuming that we are using the mechanism shown in Fig. 16–16, I estimate the required control force to be on the order of magnitude of two to three lbs. This seemed on the high side when I first calculated it, so I measured the force required to actuate several different "buttons" on commercial equipment in my employer's laboratory. I found that these ranged from one, to a little over four lbs. The one-lb button was so light that it was unsatisfactory. There was no feeling of having accomplished anything when it was pushed. At the other end of the scale, the four-lb button, although still manageable, was a little uncomfortable. I concluded, therefore, that a two- to three-lb escapement control force would be more acceptable.

Final Details

There are many other factors which could be considered in the complete design of a printer, of course.

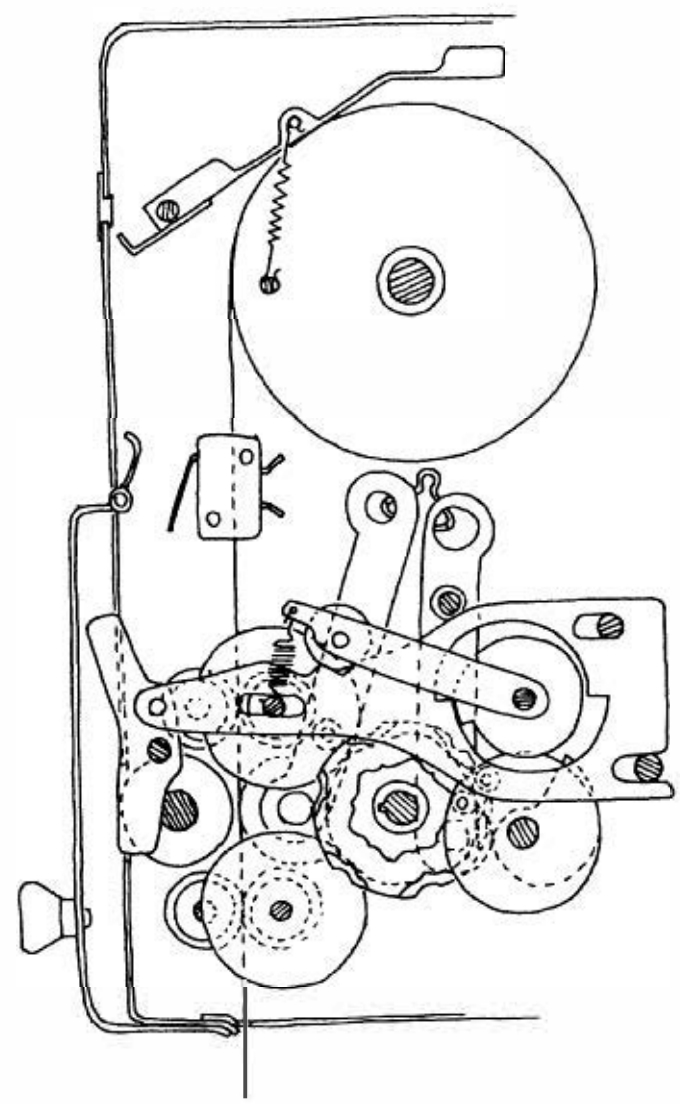

Fig. 16–18. Final layout of the intermittent motion drive system showing its relationship to principal elements of the printer.

The feed rolls should be crowned slightly to prevent the paper from walking toward one side. Edge guides should, perhaps, be provided at critical points for the paper. The counter should be mounted near the cover so that the operator can read printed numerals on one side while embossed characters on the other side are printing. An indicator of some kind should be provided to warn the operator when the paper is nearing depletion. The cover of the printer should be hinged in such a way that the feed rolls and paper roll can be reached easily for replacement of the paper. The idler rolls should be mounted on small levers so that they will be able to cramp and grip the feed rolls.

The drive motor should be capable of producing a little more torque than the calculations indicate is required in order that there will be a safety factor to offset approximations and errors in the calculations. The motor tentatively selected for this design would produce approximately 5.8 in-lbs at 250 rpm. This motor is 4½ inches in diameter and 5½ inches long; a little larger than I would have liked, but still usable.

As mentioned earlier, it would probably be more desirable to provide an adjustable spring-loaded drag plate to control the paper roll rather than the deadweight shown in the earlier illustrations. The drag torque would then be adjustable, another safety factor. The slip torque of the slip clutch could also be made adjustable.

There are many other factors, I am sure, which should and would be considered in the design of an actual printer, but I hope this one example has served to illustrate the type of procedure one must follow in designing an actual intermittent motion mechanism for a particular design situation. Again, it is most important to realize the degree of interplay that exists between the design of the indexer and the design of the total system. Each influences and is influenced by the other, and it is only when the entire system has been brought into balance that the designer can consider his job finished.

Figure 16-18 shows a partial layout for the final printer design. Many elements are still lacking, but the principal elements of the intermittent motion drive system are all present and accounted for.