FINGER LAKES Vineyard Notes

Newsletter #12 November 24, 2006

Cornell Cooperative Extension

Finger Lakes Grape Program

In This Issue...

The Construction of Equipment for Hilling-up and Taking-out Soil Around Grafted Grapevines[1]

SWMREC Special Report #23

Tom Zabadal, Gary VanEe, Gaylord Brunke, Richard Ledebuhr, Brian Hauch and Dave Francis

Southwest Michigan Research and Extension Center
Michigan State University

[Ed. Note: This article is a reprint of SWMREC Special Report #23, published by Michigan State University. We thank Tom Zabadal for permission to reprint the article and figures in this issue of Finger Lakes Vineyard notes. The article is posted at:http://www.maes.msu.edu/swmrec/. - TEM]

Introduction. Grapevine tissues may become severely injured by low winter temperatures. This is problematic in a temperate climate, such as Michigan, when a grower attempts to grow a relatively cold-tender grape variety. One method of avoiding such injury is to protect vine tissues with the insulating quality of soil, which may raise the over wintering winter minimum temperature by as much as 30 degrees F compared to the ambient air temperature at 60" above ground.

Figure 1

Over the years several pieces of equipment have been utilized to mound soil around grapevines in the fall and remove it in the spring. Often these efforts are made to protect scion tissues just above the graft union of grafted vines. Less often the soil is mounded under the trellis to protect the fruitfulness of canes that have been placed on or near the ground in an effort to preserve fruiting potential for the following growing season. We have endeavored over a period of several years to develop specialized equipment that will facilitate both the hilling-up and taking-out of mounds of soil under the trellis. This publication is intended to assist those who would like to construct equipment of a design similar to that developed by our efforts.

Hilling-up Equipment. Hilling or ridging of soil under the trellis was routinely performed by growers a half-century or more ago as a means of vineyard floor management to control weeds under the trellis and perhaps to channel soil surface water flow to reduce soil erosion on hillside vineyards. Specialized take-out and hilling-up blades were used to move soil in and out from around vines in the fall and spring, respectively. Mechanized versions of these blades have been commercially available for several decades. Our efforts at hilling-up of soil have concentrated on the concept of using several plow blades rather than one so

that soil could be gathered from a wider but shallower pattern than when using a single blade. The rationale has been to minimize the erosion potential during the winter after the hilling has taken place by reducing the depth of the plow furrow. By reducing the depth of plowing we presume that it also reduces the hazard of root pruning of vines. To accomplish this wider, shallower plow pattern, we have used three disc plows with the lead plow feeding the second, and the second in turn, feeding the third, and the third plow actually creating the ridge of soil under the trellis (Fig. 1). The practical concerns about building a unit of this type are that it must be durable and the torque created by this plowing action tends to steer the front of the tractor into the trellis area. Regarding durability, we constructed a heavy-duty frame on which we mounted these three disc plows. We have provided a schematic top view to show the dimensions of that framework (Fig. 2). We've also provided a schematic to show a three-dimensional view of this unit (Fig. 3). On this drawing you can see both a guide coulter and an adjustable depth wheel. The coulter helps to reduce the torque created during plowing and the depth wheel gives better control of the overall pattern of plowing. We also added a counter-weight bracket and an adjustable storage leg for this unit when it is not being used. The disc plows themselves were mounted with a very heavy duty set of John Deere disc bearing clamps. A listing of the components of this unit and their John Deere part numbers is provided (Fig. 4). To ensure the smooth operation of each disc plow it is mounted on a rod with a bearing (Fig. 5).

We do not have cost information for the parts involved with fabricating this unit. However, it is a reasonably-costly unit to construct. One grower has taken this design and fabricated a very similar unit using less costly components (Fig. 6) and (Fig. 7).

Take-out Equipment. After investigating several variations of take-out equipment, we have concluded that the commercially available Weed Badger unit has several desirable features for removing the ridge of soil along a row of grapevines. The basic function of the unit and its ability to sense and move around grapevine trunks and trellis posts worked well in our efforts. However, we found it necessary to modify this commercial unit in two ways so that it would perform to our satisfaction. First, the hydraulics of this unit, as we originally used it without modification, were not capable of maintaining a constant rotation of the hydraulic motor in the head of the unit when we were using it to remove the bulk of the soil volume from under the trellis. The unit would begin to lag and slow rotation, when part of the hydraulic capacity of the unit was needed to perform movement functions of the arm. Therefore, we dedicated the hydraulics of the Weed Badger unit to the rotation of the hydraulic motor in the head of the unit. The hydraulics of the tractor were used to perform the movement functions. In this way, we have been able to maintain a constant rotation of the take-out head even in relatively large volumes of heavy soils.

To accomplish take-out of soil from around vines and trellis with this Weed Badger unit, we constructed two custom implements. The first of these was a paddle wheel. The strategy used with this paddle wheel was to undercut the ridge of soil so that soil above the rotating blades of this paddle would then fall down into the paddles and also be removed. A picture and the dimensions of this paddle wheel can be found at (Fig. 8). After this paddle wheel has performed its operation on both sides of the trellis row, mounds of soil will remain around vines and trellis posts (Fig. 9). To complete the task of taking out the soil, a second implement was constructed consisting of 32" diameter brushes (Fig. 10). Typically, two 1" thick brushes are sandwiched between two 10" diameter metal plates. Brushing just below the graft unions of grafted vines (Fig. 11), on both sides of the trellis, results in a 100% mechanical removal of the mound of soil (Fig.12).

We hope this information is helpful to those who have a need to protect portions of their grapevines from injury caused by low winter temperatures.

[1] *We thank the Michigan Grape and Wine Industry Council and the Michigan Agricultural Experiment Station for financial support that made this work possible.*

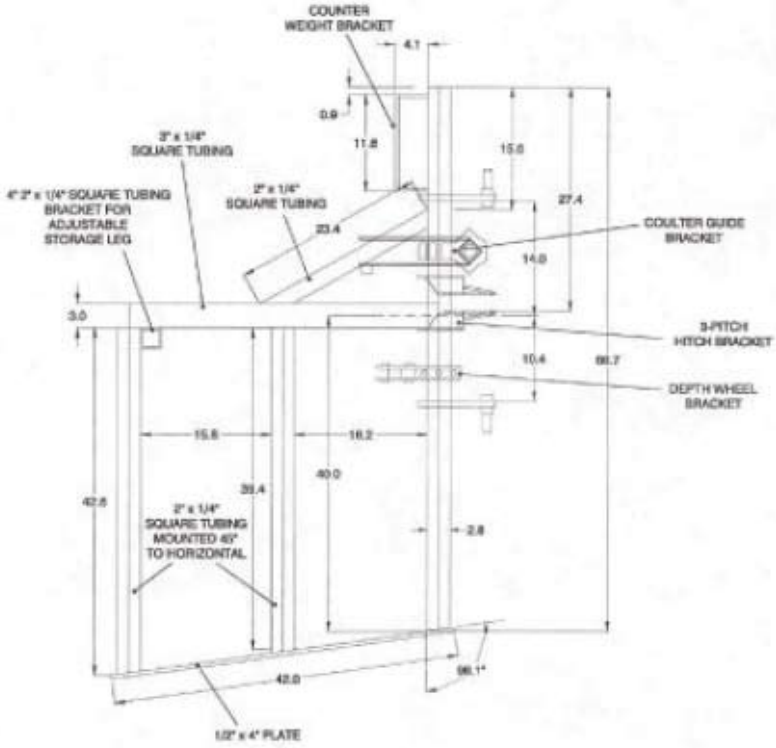

Figure 2

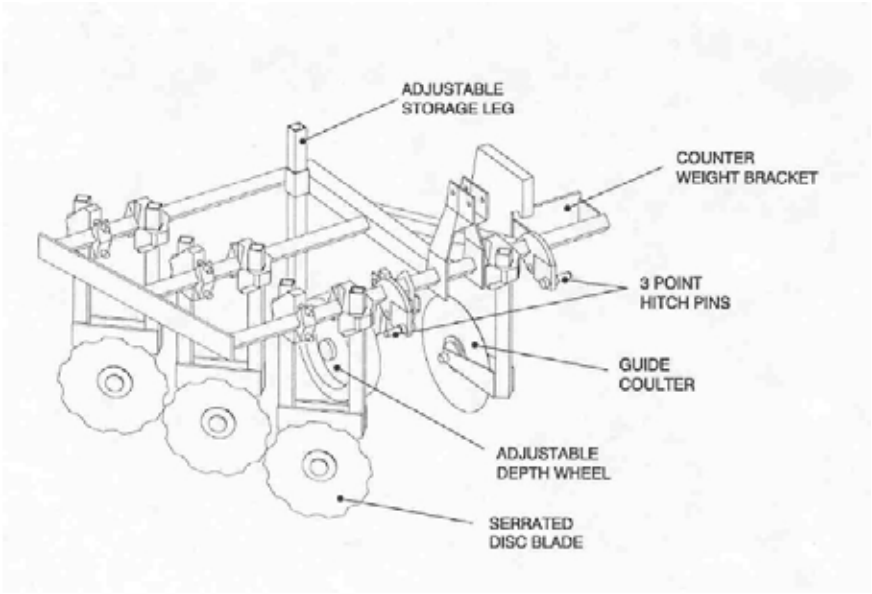

Figure 3

Figure 4. Parts List for hilling-up unit (John Deere Part numbers)

DESCRIPTION	QUANTITY	J.D. PART NUMBER
Tool bar clamp inner	7	K37200
Tool bar clamp outer	7	K35708
Tool bar clamp bolts	14	K35688
Tool bar (with 3 pt. hitch) 84”	1	AN180269
Coulter bracket	1	AN131843
Coulter hub	1	AN212394
Coulter blade (18”)	1	N130051
Gauge wheel hub	1	AA20702
Gauge wheel cap	1	C2213E
Gauge wheel tire (16”)	1	C1231N
Gauge wheel halves	2	C1232N
Gauge wheel spindle	1	B14262
Disc bearings	6	A20175
Disc bearing clamp inner	6	E50822
Disc bearing clamp outer	6	AE31317
Inner spool	3	A20621D
Outer spool	3	A20622
18” Serrated disc blade	3	B31342

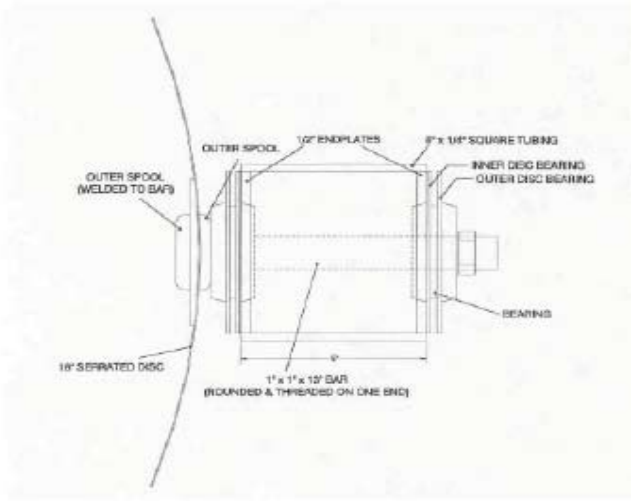

Figure 5

Figure 6

Figure 7

Figure 10

Overall diameter = 19 1/2"
Height of a paddle = 4"
Number of paddles = 8
Thickness of metal for paddle = 3/8"

Figure 8

Figure 11

Figure 9

Figure 12

Burying Canes in the Finger Lakes: The Impact on Buds and Canes

Tim Martinson and William Wilsey
Finger Lakes Grape Program

Martin Goffinet and Mary Jean Welser
Dept. Horticultural Sciences, Geneva
Cornell University

[Editors' Note: This article originally appeared in the Wine East Sept-October 2006 issue (www.wineeast.com) Thanks to editors Linda Jones McKee and Hudson Cattell of L&H Photojournalism for permission to reprint this article here. - TEM].

Following devastating winter injury in both 2004 and 2005, Finger Lakes growers and wineries lost both vines and money. At least five area growers decided to bury canes, or even entire vines, to preserve fruiting potential for the following year. This presented us with an opportunity to examine what happens to the buds and canes when they are buried.

Burying canes and trunks is, of course, an extreme practice, and a costly one. It can only be justified if it increases returns over the medium term by allowing growers to harvest at least a partial crop of cold-tender varieties after severe winters. This past winter turned out to be a mild one with very little winter injury in the Finger Lakes. It thus was a good year to evaluate how dormant canes and buds are affected when placed in an environment with radically different exposure to air, light, and water.

What happened during the 2004 and 2005 freezes? Following low temperatures in January, 2004, and again in January, 2005, many *Vitis vinifera* and some hybrid blocks in the Finger Lakes suffered severe bud and trunk injury that left vines with little or no crop to harvest. Poor ripening conditions in 2003, late harvest and, in some cases, a heavy crop left vines more susceptible to winter injury in 2004. A survey of 185 vinifera blocks in 2004 showed that Merlot, Gewürztraminer, Pinot Gris, and Pinot Noir suffered the worst losses (82%-94% crop potential lost). Cabernet Sauvignon, Chardonnay and Cabernet Franc were intermediate (70%-81% crop potential lost), and White Riesling fared relatively better (56% crop potential lost). Additional trunk injury and relatively low crop occurred again in 2005. By 2006, mature vines in existing vineyards (not counting extensive replacement vines) were back up to a normal bud complement. There were also abundant canes available in the right position (i.e., near the graft union) to experiment with cane burial.

Figure 1: At this Pinot Gris vineyard on west Seneca Lake (Site 1), the grower tied three to four canes to a wire a couple of inches above ground level. Soil was then mounded on top of the wire to bury the canes completely. The adjacent row in the background shows intact mounds.

Cane Burial Strategies. Methods varied for laying down canes in fall, 2006, but most growers who attempted this practice used a wire near ground level for tying canes down (Figure 1). Two to four canes were loosely wrapped around the bottom wire and tied with twine (Figure 2). They were all tied in the same direction to facilitate removal in the spring. The above-ground portion of the vines was retained for later pruning and tying. Another grower pre-pruned the entire vine to 4-6-inch long canes, wrapped and tied the canes along a ground wire (Figure 3 and 4), and then buried the entire vine.

After the canes (or vines) were laid down, earth was moved with a grape hoe or plow to cover up both the canes and the graft union (Figure 5). At the site where entire vines were buried, this resulted in a large hill about 15-20 inches deep (Figure 6), or about 3 times as high as a "normal" hill used to cover the graft union. Some settling left a few canes exposed at both vineyards (Figure 7).

Factors Evaluated. Buried canes are protected from ambient air temperatures, exposure to sunlight, and are in a very moist environment underground. We thought

Figure 2: Close-up illustrating how canes were bent and tied to the wire with twine at vineyard Site 1.

Figure 3: At Site 2, Pinot Gris vines were trimmed to 4-5-inch long canes, and the entire vine was buried.

Figure 4: At Site 2, the low wire was fastened to line posts with a wire clip.

Figure 5: Hilling up to cover the graft unions and bury canes at Site 1.

Figure 6: Berms approximately 15-20 inches deep (right side) were required to bury Pinot Gris vines completely at Site 2. An adjacent Cabernet Franc block (left side) illustrates normal hills for comparison purposes.

Figure 7: Soil settled following the "hill-up" operation, leaving some canes exposed.

it likely that this might affect winter acclimation as measured by low temperature exotherms (LTE). The humid and often wet environment of the soil also might adversely affect bud viability over many months below ground. In cooperation with growers, we initiated a project to evaluate several factors that may affect cane and shoot performance with burial: 1) bud hardiness as measured by low-temperature bud freezing points (LTE); 2) hourly temperatures below the soil, at ground level, and at the fruiting wire from mid-February to early April; 3) percentage of dead buds (blank nodes) on aerial and buried canes; and 4) resulting cluster number

on buried vs. above-ground canes. We did this at three different vineyards, including two with both aerial and buried canes and at the Pinot Gris vineyard where entire vines were buried. Here we report our preliminary data and observations for Pinot Gris, Gewürztraminer, and Cabernet Franc at one vineyard (Site 1), and the completely buried Pinot Gris vineyard (Site 2).

Temperatures in soil and air. One concern with the performance of buried canes has to do with respiration of the cane and bud tissues in the soil, where the environment can be very wet and oxygen to support respiration may be scarce. A second concern was that temperature spikes during extended warm periods could also lead to increased microbial activity and to de-acclimation of cane and bud tissue.

We used remote, wireless temperature sensors to record hourly temperatures from late mid-winter to near bud burst at both Site 1 and Site 2 vineyards. Readings were taken at three levels: at the depth of the buried canes, at the surface of the hilled soil, and about 30 inches above the hill at the level of the fruiting wire (Figure 8).

Figure 8: Pinot Gris vine in winter showing locations of three wireless temperature sensors placed relative to the aerial and buried canes at vineyard Site 1. Actual locations for the two aerial sensors were at these levels, but attached to the north side of vineyard posts to avoid solar heating in mid-day. The buried sensor was placed at the wire holding the buried canes.

The seasonal rhythm of temperature changes was nearly identical for the two sites (Figure 9). The lowest temperatures (3°F or -16°C) were recorded late in the second and fourth weeks of February. No vine-killing temperatures were recorded during our test, but we did not have data for earlier in the winter. Canes beneath the soil berms never experienced temperatures lower than about 28 °F (-2 °C). Such canes were buffered

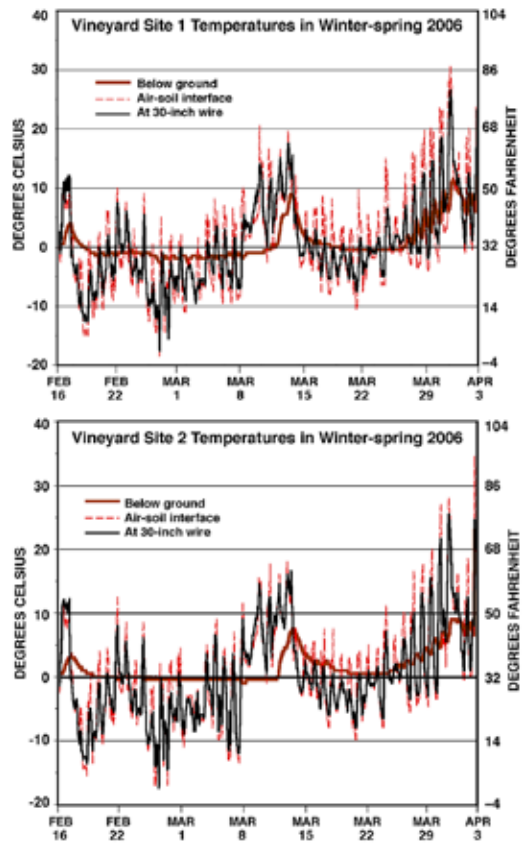

Figure 9: Continuous hourly temperatures recorded at two vineyard sites in 2006, from mid-February to early April (time of cane excavation). Sensors were placed below the soil at the location of the buried canes, and on the north side of vineyard posts at the air-soil interface of the hilled soil, and at the level of the wire approximately 30 inches above the soil.

from temperature fluctuations, both daily and in terms of seasonal warming or cooling conditions. Rise and fall of temperature beneath soil always lagged behind aerial changes. A prolonged warm spell in the second week of March raised temperatures at all sensor positions. Even the buried sensors eventually warmed to 47°F (8-9°C) before a cooling trend began. By the time canes were excavated the first week in April, soil temperature was approaching 50°F (10°C). The temperature at the soil-air interface was higher than that at the wire height during daytime, but lower than that at wire height at nighttime.

Bud freezing points. On February 16, 2006, and again on March 28, we collected two buried and two non-buried (aerial) canes on several marked vines of each of the three grape varieties and brought them to the laboratory to determine bud-killing temperatures and examine buds for visual evidence of bud injury. On each cane, we selected three buds (nodes 2, 5, and 9) for controlled freezing runs and three additional buds

(nodes 3, 6, and 10) for dissection. Using these samples, we were able to determine the average lethal bud-killing temperature and to rate the extent of bud injury as indicated by tissue browning.

Table 1. *Mean bud-killing temperatures at Site 1 on February 16, 2006, and on March 28, for Pinot Gris, Cabernet Franc, and Gewürztraminer buds on canes left exposed to the air or buried in soil.*

	Pinot Gris		Cabernet Franc		Gewürztraminer	
Date	**Aerial**	**Buried**	**Aerial**	**Buried**	**Aerial**	**Buried**
Feb. 16, 2006	-20.7°C (-5°F)	-19.9°C (-6°F)	-20.7°C (-5°F)	-19.8°C (-4°F)	-20.7°C (-5°F)	-18.8°C (-2°F)
March 28, 2006	-18.1°C (-1°F)	-16°C (3°F)	-16.7°C (2°F)	-15.1°C (5°F)	-15.5°C (4°F)	-14.7°C (6°F)

On February 16, aerial canes of all varieties (Table 1) were cold hardy to -5°F (-21°C), and buried canes were about 1-2°F (1°C) less cold hardy. By March 28, cold hardiness had dropped, such that aerial canes were 4-9°F (3-5°C) less cold hardy than in February. Again, buried canes were about 2-5°F (1-2°C) less cold hardy than were aerial canes. We saw similar differences in levels of cold hardiness in another grower's blocks of Cabernet Franc and Gewürztraminer (data not shown).

Early spring development. At Site 1, two buried and two aerial canes were retained per vine after pruning, allowing comparison of the two cane categories after bud break. While we didn't collect data on the initial phase of bud burst, we saw that burying canes clearly delayed shoot emergence. Canes were unburied on April 1, and by May 9 we observed differences in early shoot development (Figure 10). This occurred with all three varieties at Site 1.

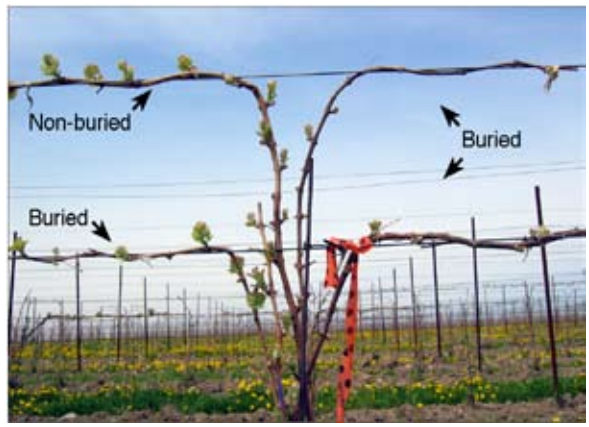

Figure 10: Gewürztraminer on May 9, 2006, at vineyard Site 1, after excavating buried canes on April 1. Note the delay in bud break on previously buried canes, although there was some "catch up" of these buds by June. Problems appeared worst in Pinot Gris vines.

Percentage of live buds. We counted the number (by bud position on retained canes) of live buds in Gewürztraminer, Pinot Gris, and Cabernet Franc at Site 1. At Site 2, we did the same for its Pinot Gris vines. However, since the entire vine was buried at Site 2, our estimate of live nodes was from buried canes only. Compared to aerial canes, buried canes had only a slight reduction in the percentage of nodes with live shoots in the three Site 1 blocks (Table 2). What is not shown in Table 2 is the fact that there was a difference in the position of canes, because the aerial canes started at the trunk and the buried canes started at the base of the vines. When we compared the percentage of live shoots among just the nodes along the fruiting wire (where shoots are retained), buried canes had a slightly lower percentage of live nodes (78% for buried and 88% for aerial canes in Pinot Gris; 76% buried vs. 84% for aerial in Cabernet Franc; 63% buried vs. 65% aerial for Gewürztraminer). There were more stunted shoots on live nodes from buried canes in the Pinot Gris block. At Site 2, where all canes were buried, less than half of the retained Pinot Gris buds (49%) pushed out as shoots (Table 2).

Clusters per retained cane. We counted clusters on both buried and aerial canes at the three Site 1 blocks in mid-July (Table 2). The number of clusters per retained cane (generally 4 canes per vine) were only slightly reduced in the Gewürztraminer block, comparable in the Cabernet Franc block, but reduced by half from 6.2 to 3.7 in the Pinot Gris block. At the time of the counts, the grower had completed cluster thinning to adjust the crop, so the numbers we got from the three blocks didn't reflect the initial number of clusters produced, but rather the clusters retained by the grower. The bottom line is that the grower was able to retain sufficient crop in Gewürztraminer and Cabernet Franc (approximately 6 clusters x 4 retained canes = 24 per vine) for target yields. However, in the Pinot Gris block, cane burial reduced the number of retained clusters by half. Although we didn't determine cluster number it in the Site 2 Pinot Gris block, our impression was that cluster number was reduced in that block as well.

Costs. Growers estimated the cost of cane burial (above normal pruning costs) at around $500 per acre. This included additional hand labor for laying down and tying the canes to the low wire (many growers used one of their moveable catch wires to do this). Un-burying the canes involved making an initial pass with the grape hoe to "take out" the sides of the hills to gain access to the canes, then pulling up the wire with canes attached, and tying these canes to the trellis. The grower at Site 1 reported no additional cost for this procedure. It is common practice to make two passes with a grape hoe to unbury vines. The crew simply lifted up the canes (and catch wire) as part of the normal tying process, at the same piecework rate. For other growers, there may have been additional procedures that incurred more expense.

Table 2. Percentage of retained buried and aerial nodes with shoots and resulting cluster counts at two sites in the Finger Lakes in 2006.

		% Nodes with shoots		Clusters per retained cane	
Site	**Variety**	**Aerial**	**Buried**	**Aerial**	**Buried**
Site 1	Gewürztraminer	59.1	51.5	6.8	5.7
	Cabernet Franc	76.8	74.3	6.3	6.7
	Pinot Gris	78.8	71.5	6.2	3.7
Site 2	Pinot Gris		49.1		

Note: Four canes were retained per vine, and cluster counts are for the entire retained cane. Cluster counts were not taken at Site 2.

If one assumes vines will suffer significant aboveground cold injury in about one year in ten, the value of the crop retained would have to be about $5,000 per acre to offset the additional costs of cane burial. At current prices of $1,500 to $1,700 per ton for these varieties, one would have to produce an additional 2.4 to 3.3 tons per acre of grapes to offset the costs identified by the grower at Site 1. For a winery, the cost of not producing these varietal wines in a year with significant vine injury would be greater, so the reduction of risk that cane burial would provide could be worth significantly more than the farm-gate value of the grapes alone.

Conclusion. Cane burial did not produce any significant gains for growers in 2006, because winter injury was minimal. Unfortunately, we cannot predict how severe the damage will be at the start of the dormant season. The cost of cane burial is considerable, and for this management strategy to be effective, it needs to be done every winter. That limits its usefulness to the most cold-sensitive varieties (Pinot Noir, Gewürztraminer, and Merlot). The experience this year indicates that varieties varied in their response. Pinot Gris did not respond well to cane burial. Shoot development was delayed after cane burial in all varieties. However, it appears that previously buried Cabernet Franc and Gewürztraminer canes "caught up" with aerial canes by the middle of the growing season.

The modest reduction in bud viability and temporary delay in development of buried buds did not appear to reduce crop potential for Gewürztraminer and Cabernet Franc. Pinot Gris, however, saw reduced cluster number and some reduction in bud viability. We hope to repeat this study next year to gain additional information in a different dormant season.

The Site 1 grower plans to continue burying canes, but will modify the procedure. Instead of burying 3 or 4 canes per vine, he plans to bury only two per vine. He feels that this will reduce the height of the "arch" at the base of the vine, and will provide enough crop potential to insure against a total crop loss in a year with severe winter injury. He feels that the cost was low enough and the benefit of maintaining fruiting potential was great enough to justify continuing this practice. Burying the entire vine, as the grower at Site 2 did, is less optimal as a routine practice because the grower loses the benefit of the aerial canes (in mild winters), and Pinot Gris in this case showed substantial reduction in bud viability for the buried vines. To that we would add that the potential for mechanical injury of the entire vine structure is greater with whole-vine burial. This could potentially predispose these vines to crown gall injury, in addition to the direct injury from laying down the entire vine.

Upcoming Newsletters

The annual *Harvest Issue (#11)* will be mailed before thanksgiving. Look for it soon.

Upcoming events, including *Viticulture 2007,* will be covered fully in the December *Vineyard Notes*.

COMMISSIONER ANNOUNCES $266,000 TO IMPROVE NY WINERY WEBSITES

Jessica Chittenden
New York State Dept of Ag and Markets

114 NY Wineries to Enhance Internet Marketing, Promotion of NY Wines

\

Albany, NY. October 26. New York State Agriculture Commissioner Patrick H. Brennan today announced nearly $266,000 to create or improve the websites of 114 New York State wineries. These grants will help promote New York wines via the internet, which will hopefully attract more tourists to New Yorks wine regions, and expand the sales of New York wines to customers throughout the country.

The wine web improvement grants provides New York wineries with a matching grant up to $2,500 to create or improve their website. Eligible projects included adding age verification software, foreign translation, direct shipment capabilities, a shopping cart feature, online payment processing capabilities, or improving handicapped accessibility or graphics.

NEW YORK WINE WEB IMPROVEMENT GRANT RECIPIENTS

Long Island $49,302.00
Hudson Valley $36,775.00
Cayuga Lake $37,009.25
Ashley Lynn Winery, Dundee $2,500.00
Beak & Skiff Apple Farm Winery, Lafayette $2,430.00
Bellwether Hard Cider, Trumansburg $2,500.00
Buttonwood Grove, Romulus $1,743.75
Cayuga Ridge Estate Winery, Ovid $2,500.00
Chateau Dusseau, Locke $1,993.50
CJS Vineyards, Auburn $630.00
Cobblestone Farm Winery & Vineyard, Romulus $2,500.00
Eves Cidery, Ithaca $1,962.00
Frontenac Point Vineyard, Trumansburg $1,600.00
Glenhaven Farm Winery, Trumansburg $2,500.00
Hosmer Winery, Ovid $2,500.00
King Ferry Winery, King Ferry $2,500.00
Lakeshore Winery, Romulus $1,650.00
Long Point Winery, Aurora $2,500.00
Lucas Vineyards, Interlaken $2,500.00
Montezuma Winery, Seneca Falls $2,500.00
Seneca Lake $61,038.09
Amberg Wine Cellar, Stanley $1,946.00
Anthony Road Wine Co., Penn Yan $2,130.00
Arcadian Estate Winery, Rock Stream $2,500.00
Atwater Estate Vineyards, Hector $2,500.00
Billsboro Winery, Geneva $900.00
Bloomer Creek Vineyard, Hector $1,599.00
Cascata Winery at the Processors Inn, Watkins Glen $2,500.00
Earle Estates Meadery, Penn Yan $2,500.00
Fox Run Vineyards, Penn Yan $2,500.00
Fulkerson Winery, Dundee $2,499.75
Glenora Wine Cellars, Dundee $2,500.00
Hazlitt 1852 Vineyards, Hector $2,500.00
Hermann J. Wiemer Vineyard, Dundee $2,500.00
Hickory Hollow Wine Cellars, Dundee $2,500.00
Lakewood Vineyards, Watkins Glen $1,382.84
Lamoreaux Landing Wine Cellars, Lodi $2,500.00
Leidenfrost Vineyards, Hector $2,500.00
Miles Wine Cellars, Himrod $2,500.00
Prejean Winery, Penn Yan $2,500.00
Rock Stream Vineyards, Rock Stream $2,500.00
Seneca Shore Winery, Penn Yan $2,500.00
Shalestone Vineyards, Lodi $1,399.00
Standing Stone Vineyards, Hector $2,400.00
Wagner Winery, Lodi $2,500.00
White Springs Farm Estate Winery, Geneva $2,339.00
Damiani Wine Cellars, Hector $1,942.50
Ventosa Vineyards, Geneva $2,500.00
Keuka Lake $14,975.00
Barrington Cellars, Penn Yan $2,500.00
Bully Hill Vineyards, Hammondsport $2,475.00
Heron Hill Vineyards, Hammondsport $2,500.00
Hunt Country Vineyards, Branchport $2,500.00
Keuka Spring Vineyards, Penn Yan $2,500.00
Rooster Hill Vineyards, Penn Yan $2,500.00
Canandaigua Lake $8,906.25
Arbor Hill Winery, Naples $2,500.00
Arborvale Wine Company, Livonia $2,500.00
Deer Run Winery, Geneseo $1,406.25
Eagle Crest Vineyards, Conesus $2,500.00
Lake Erie & Chautauqua $23,375.00
Niagara Escarpment $18,403.00
Other Wineries $16,207.00

TOTAL AWARDED STATEWIDE $265,990.59

Cornell University
Cooperative Extension

Newsletter No12
November 24, 2006

FINGER LAKES VINEYARD NOTES
is published monthly by
Cornell Cooperative Extension
Finger Lakes Grape Program
Ontario, Schuyler, Seneca, Steuben, and Yates
Counties
County Office Building
417 Liberty Street • Penn Yan, NY 14527

Comments may be directed to
Timothy E. Martinson
Area Extension Educator
Finger Lakes Grape Program
315-536-5134
tem2@cornell.edu

Cornell Cooperative Extension
Finger Lakes Grape Program
417 Liberty Street
Penn Yan, NY 14527