POTENTIAL FOR RENEWABLE HYDROGEN PRODUCTION FROM DAIRY MANURE-BASED BIOGAS IN NEW YORK STATE

A Dissertation

Presented to the Faculty of the Graduate School

of Cornell University

In Partial Fulfillment of the Requirements for the Degree of

Doctor of Philosophy

by

Arvind Chandrasekar

January 2009

POTENTIAL FOR RENEWABLE HYDROGEN PRODUCTION FROM DAIRY MANURE-BASED BIOGAS IN NEW YORK STATE

Arvind Chandrasekar, Ph. D.

Cornell University 2009

The need for transition to a hydrogen-based economy includes national energy security and the mitigation of likely global changes due to greenhouse gas emissions resulting from fossil fuel use. The utilization of animal manure and other organic residuals as a source of hydrogen generation will serve the dual purpose of pollution prevention and renewable energy production.

This study includes a rigorous analysis of the various biogas utilization options that exist on a large confined animal feeding operation (CAFO). The research undertaken draws from a demonstration project examining the feasibility of hydrogen production from biogas on a dairy farm. This work is also an illustration of the use of a geographical information system to enable a thorough analysis of systems of centralized anaerobic digesters for hydrogen production from dairy manure collected from clusters of dairy farms in New York State.

In this dissertation, it was found that hydrogen production from biogas is an economically viable option. Compared to other utilization routes investigated, namely production of electricity, production of heat and production of pipeline quality substitute natural gas, renewable hydrogen production was found to be the best economic option, especially on farms with 500 cows or more. Increased yields of hydrogen can be achieved by the addition of food processing waste to be co-digested with manure. In this study, it was also found that 203 dairy farms in NYS with 500 or

more cows have the potential to supply 6.9 million Kg/y renewable hydrogen, which represents over 53% of all merchant hydrogen produced in NYS.

It is recommended, based on a review of scientific literature as well as market availability, that steam reforming of cleaned biogas, followed by the water gas shift reaction, accompanied by the use of a membrane reactor allowing for the selective removal of high purity product hydrogen is the best thermo-chemical option to convert biogas to hydrogen. There exist clusters of dairy farms which permit more efficient and economic ways to handle not only manure but also other organic waste which can be co-digested in community scale digesters.

BIOGRAPHICAL SKETCH

Arvind Chandrasekar was born in India. He has an undergraduate degree in chemical engineering from National Institute of Technology, Karnataka located in Surathkal, India. He has a master's degree in food process engineering from Illinois Institute of Technology, Chicago. His current interests are in renewable energy systems, air quality and agricultural development. He is married to Maki Ueyama and currently lives in Chennai, India.

To the teachers who most influenced me:

Professor George Sadler and Professor Norman Scott

ACKNOWLEDGMENTS

First and foremost, thanks go to my parents who have stood by me at all times. Special thanks should go to my sister for always being there.

My heartfelt gratitude goes to all the teachers of the world for choosing one of the noblest professions in this world.

My wife's family has also stood by us at all times and I would like to mention my gratitude to them.

Dear Professor George Sadler: Thank you for having so much faith in me and for all the friendship, inspiration and support.

Dear Professor Norman Scott: Thank you for making my graduate school experience so wonderful. Thank you for the freedom you gave me to explore the wonder that is Cornell.

Most sincere thanks go to my Special Committee members Professor Peter Jackson and Professor Richard Schuler.

Special thanks go to every member of our 'Cow Power' research group.

Special thanks to Curt Gooch.

Special thanks to all my friends.

To Maki: this one's for you. Thank you for making the journey the destination.

TABLE OF CONTENTS

LIST OF FIGURES

LIST OF TABLES

1 INTRODUCTION

The need for transition to a hydrogen-based economy includes national energy security and the mitigation of likely global changes due to greenhouse gas emissions resulting from fossil fuel use. For sustainable hydrogen production, all of the hydrogen will have to be produced by utilizing renewable energy sources such as wind, solar, hydro, geothermal and biomass. The utilization of animal manure and other organic residuals as a source of hydrogen generation will serve the dual purpose of pollution prevention and energy production. In order for dairy manure to contribute to a future hydrogen-based energy economy in New York State, it is prudent to utilize current well-established technologies such as anaerobic digestion to produce biogas; and thermo-chemical processes to convert the biogas to hydrogen.

The use of geospatial analytical tools can aid researchers to get unique perspectives on planning large scale renewable energy and resource recovery projects. They will also enable policymakers to better understand complex problems such as waste management and renewable energy production with the aid of graphical and visual tools. This study includes a rigorous analysis of the various biogas utilization options that exist on a large confined animal feeding operation (CAFO). The research undertaken draws from a demonstration project examining the feasibility of hydrogen production from biogas on a dairy farm. This work is also an illustration of the use of a geographical information system (GIS) to enable a thorough analysis of systems of centralized anaerobic digesters for hydrogen production from dairy manure collected from clusters of dairy farms in New York State.

In this dissertation, it was found that hydrogen production from biogas is an economically viable option. Compared to other utilization routes investigated, namely production of electricity, production of heat and production of pipeline quality

substitute natural gas, renewable hydrogen production was found to be the best economic option, especially on farms with 500 cows or more. Increased yields of hydrogen can be achieved by the addition of food processing waste to be co-digested with manure. In this study, it was also found that 203 dairy farms in NYS with 500 or more cows has the potential to supply 6.9 million Kg/y renewable hydrogen, which represents over 53% of all merchant hydrogen produced in NYS. If H_2 prices were to fluctuate between $1.50 and $3 per kg H_2 between 2005 and 2015 according to a DOE study, this would represent an annual revenue stream of $10 – $20 million for NYS.

It is recommended, based on a review of scientific literature as well as market availability, that steam reforming of cleaned biogas, followed by the water gas shift reaction, accompanied by the use of a membrane reactor allowing for the selective removal of high purity product hydrogen is the best thermo-chemical option to convert biogas to hydrogen. Geospatial analysis of renewable hydrogen potential of NYS indicated that there exist clusters of dairy farms which permit more efficient and economic ways to handle not only manure but also other organic waste which can be co-digested in community scale digesters. It is also recommended that the clear opportunity that exists for developing renewable hydrogen production systems from dairy manure in NY be fully utilized to contribute to the state's future hydrogen economy.

Different schemes can be envisioned by grouping or clustering dairy farms for planning renewable energy and resource recovery projects:

a) manure transport from individual farms in a cluster to a centralized location for anaerobic digestion (either on one of the farms in the cluster or at another suitable location depending on distance of the centralized digester from the individual farms and the amount of manure that needs to be hauled)

b) anaerobic digestion of manure at individual farms and subsequent transmission of biogas to a central facility where biogas can further be converted to other useful products

This study primarily examines the former case (manure transport over relatively short distances to a centralized anaerobic digester) for three main reasons: economies of scale (more manure anaerobically digested in a single location, high capital cost involved in building individual digesters in every farm), and high transportation costs for transporting manure across longer distances. It must be emphasized that the overarching principles of the above analysis utilizing geographic information systems are equally applicable to the latter case as well (digestion in individual farms and further transport of biogas to a central processing facility), though it is beyond the scope of this study. Evidence is provided to indicate the possibility of forming clusters of concentrated animal feeding operations (CAFOs) across the State, which can benefit from economies of scale for centralized digestion and hydrogen production as a value added product of manure and organic residuals management.

This dissertation is organized as follows. In this Chapter in Section 1.1, the case for the need for anaerobic digestion (AD) for manure management and resource utilization is laid. In Section 1.2, basic principles of anaerobic digestion are discussed as well as the most important parameters to be considered while designing an AD system. Chapter 2 describes how the research topic was identified and debates the relative merits and disadvantages of a future hydrogen economy. The uniqueness of this research as well as the contributions this work can make in the context of agricultural and energy policy development for NYS is also discussed in Chapter 2. Chapter 3 reviews relevant literature focusing on current options for biogas utilization

on animal farms across the US. Methods of hydrogen production focusing on natural gas and/or biogas as the primary feedstock are also described in Chapter 3.

The salient objectives of this research are described in Chapter 4 and the most significant data sources are listed in Chapter 5. Chapter 6 presents a detailed economic analysis of the various biogas utilization options at five dairy farms located in upstate NY (Section 6.1). A study of the potential of dairy farms to supply renewable or "green" hydrogen in NYS along with the various steps and methods for estimating green H_2 potential in the State is carried out in Section 6.2. One of the five farms examined, AA Dairy, also served as the test site for an USDA project to demonstrate green H_2 production from biogas. This project is described in Section 6.3 and in Section 6.4, geospatial analysis of the availability of green hydrogen in NYS is undertaken. This section illustrates the use of geographic information systems to plan and select sites for centralized AD systems for biogas-to-H_2 production.

Section 7 describes the major results of the studies undertaken. Sensitivity analysis testing for robustness of the financial simulation model developed is presented (Section 7.1) along with discussions for the possible future establishment of CAFO clusters for more efficient and economic resource utilization (Section 7.2). The need for systemic thinking for the development of agro-based energy is emphasized in Section 7.2. The main conclusions of the study are presented in Chapter 8 and Chapter 9 lays out suggestions for future research in this field.

1.1 Anaerobic Digestion for Resource Utilization

The issue of livestock waste management is critical for environmental as well as economic reasons. Untreated runoff from feedlots is a potential source of pollution of surface and ground waters. Animal manure and wastewater from CAFOs contain nutrients (such as nitrogen, phosphorous, and ammonia), organic matter, pathogens, heavy metals (such as copper and zinc), hormones, and antibiotics. When present in large quantities these pollutants can not only deteriorate ground and surface waters but also be harmful to aquatic organisms and the environment in general (EPA, 2003a,b). Odor control is another reason why livestock waste needs to be managed properly. As more humans settle in what were once rural areas and where animal operations tend to be more concentrated, the need to control odor from animal wastes becomes imperative.

The Intergovernmental Panel on Climate Change (IPCC) and the US Environmental Protection Agency (EPA) claim that livestock manure from large CAFOs can significantly contribute to global increases in greenhouse gas (GHG) emissions, especially carbon dioxide, methane and nitrous oxide (IPCC, 2001; EPA, 2001; EPA 2003b). The EPA has estimated that the shift towards larger dairy and swine farms with liquid (slurry) manure management systems accounted for eight percent of all anthropogenic CH_4 emissions in the US in 2005 (EPA, 2007a). The role of agriculture in contributing to GHG emissions is uncertain and controversial due to the lack of aggregate studies (McCarl and Schneider, 2000). Nevertheless, livestock waste management of CAFOs can be considered important owing to the fact that biogas which can be obtained from anaerobic digestion of manure can be utilized as a source of renewable energy.

Anaerobic digestion (AD) is a process that can serve multiple purposes of odor abatement of manure; production of methane, an energy fuel, in the form of biogas;

reduces ground and surface water contamination; reduction of pathogens; and makes available the nutrients (especially ammonia) present in manure as a readily available source of soil amendment that can be applied to cropland. The volatile solids content of livestock manure is converted to biogas, a mixture of roughly 60% methane and 40% carbon dioxide, by a consortium of bacteria in the absence of oxygen. Since the carbon in biogas (CH_4 and CO_2) is essentially obtained from plant material (grain and grass fed to the cows), the CO_2 generated by the combustion of biogas is not fossil derived. Biogas is a valuable source of renewable energy and its utilization for energy production offers scope to mitigate the depletion of fossil fuels.

1.2 Principles of anaerobic digestion

Anaerobic digestion (AD), also called biological gasification (or biogasification) is a natural process by which a consortium of bacteria converts organic matter to methane and carbon dioxide in the complete absence of oxygen (Isaacson, 1991). A simple depiction of the overall microbiology and chemistry involved in the AD process is shown in Figure 1 (Chynoweth, 1987).

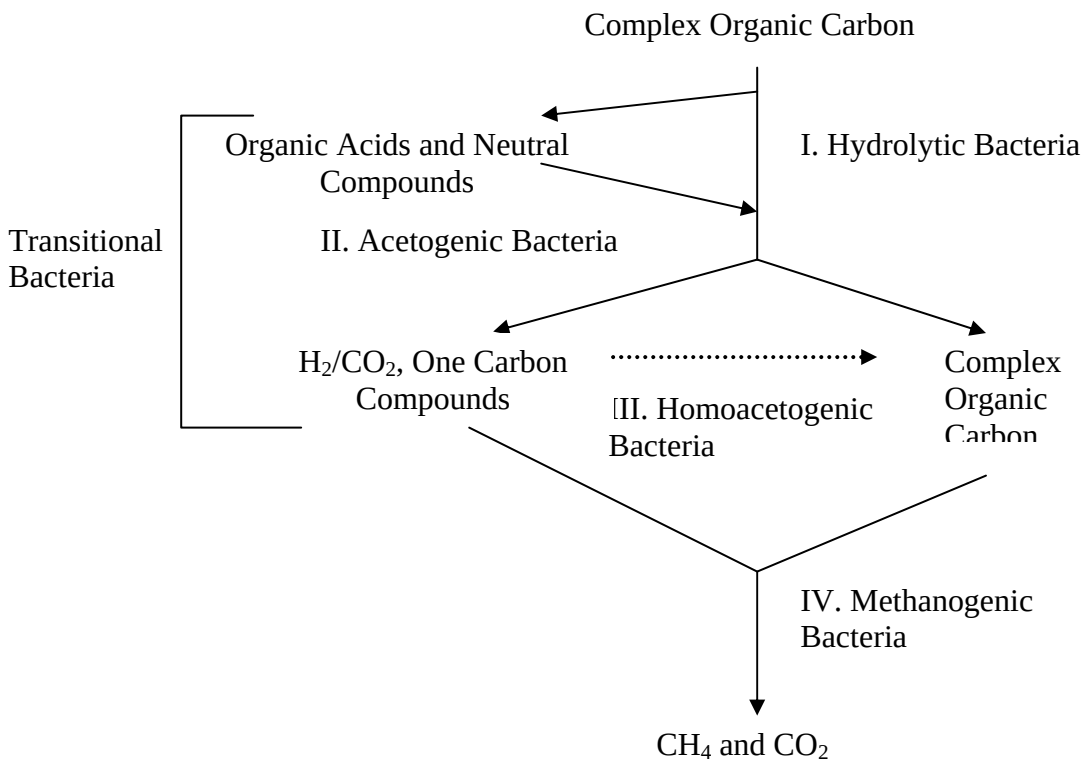

Figure 1. Simplified depiction of the AD process (Source: Chynoweth, 1987)

AD can be considered to be essentially a 4-stage process (Chynoweth, 1987). In the first step (hydrolysis), high molecular weight organic compounds are broken down into smaller molecules such as sugars, amino acids and water. This is typically followed by acidogenesis (Sleat and Mah, 1987), where acid-forming bacteria hydrolyze and ferment organic compounds (such as carbohydrates and lipids) to produce organic acids, alcohols, neutral compounds, hydrogen and carbon dioxide. These fermented products are then converted by hydrogen-producing (acetogenic) bacteria to acetate, hydrogen and carbon dioxide (acetogenesis). These acetates are further acted upon by methanogenic bacteria to yield biogas, the mixture primarily composed of methane and carbon dioxide (methanogenesis). It should be noted that

these are separate steps only in a batch operation or at the initial stages of a continuous one.

Process parameters

The main factors affecting the AD process can be classified into: chemical (substrate, absence of oxygen, nutrients, pH and absence of toxins) and physical (water, temperature, retention time, loading rate, mixing and particle surface area) (Isaacson, 1991). These factors are discussed briefly below.

Chemical parameters

The biogasification kinetics of the substrate and the microorganisms is important and care should be taken to maintain adequate populations of microbial cultures, while ensuring that enough substrate is added for biogas production. It should be noted that this balance takes some time to get established, after which the process becomes more stable. Methanogenic bacteria are pH-sensitive and are inhibited at pH < 6.6. Most community wastes are deficient in alkalinity, and lime is an economical source of making up alkalinity in digester cultures. Nutrients are very important in the AD process for microbial growth and can be provided by recycling the digester effluent. Liquid recycle provides water, and to some extent, facilitates pH and temperature control of the digester. The digester culture should also be protected from excessive amounts of toxins.

Physical parameters

Flow rates (of both input and output streams) and flow characteristics (such as the hydraulic retention time) are important factors to be monitored and maintained for efficient AD systems. Water is essential for microbial growth, for substrate transport to bacteria, for removal of waste products, for nutrient transport and for heat transfer. Mixing of the AD system is important to ensure homogeneous slurry, to prevent channeling and to ensure the rise of gas bubbles. Methane production is usually

higher at thermophilic temperatures (55 – 60°C) than mesophilic temperatures (35 – 40°C), but can affect process economics because of the need for additional energy for temperature-maintenance. In many biogas-to-energy applications with combined heat and power production systems (CHP), digester temperature is maintained by circulating hot water (in a network of pipes) produced by utilizing the waste heat of the system in heat exchangers.

Types of reactors

Anaerobic digesters are usually constructed of concrete, steel, plastic or brick, shaped like troughs, ponds or basins and can be placed underground or on the surface. The digester design will usually include: a pre-mix collection tank, the digester vessel, biogas utilization system, and a system for utilizing the effluent material. There are two basic types of bioreactors: the batch design and the continuous type.

Batch – The batch reactor is the simplest type of digester used worldwide. It is an airtight vessel into which the organic matter is added and left to digest. The degraded material has to be removed prior to adding new substrate. Though this system is not practical in medium to large scale dairy farms, it is an ideal choice for smaller operations where the volume of manure to be handled is relatively low. Though manure loading and removal can be cumbersome and unwieldy, it is cheap to construct and maintain compared to the continuous type reactors. A schematic of a batch reactor is shown in Figure 2.

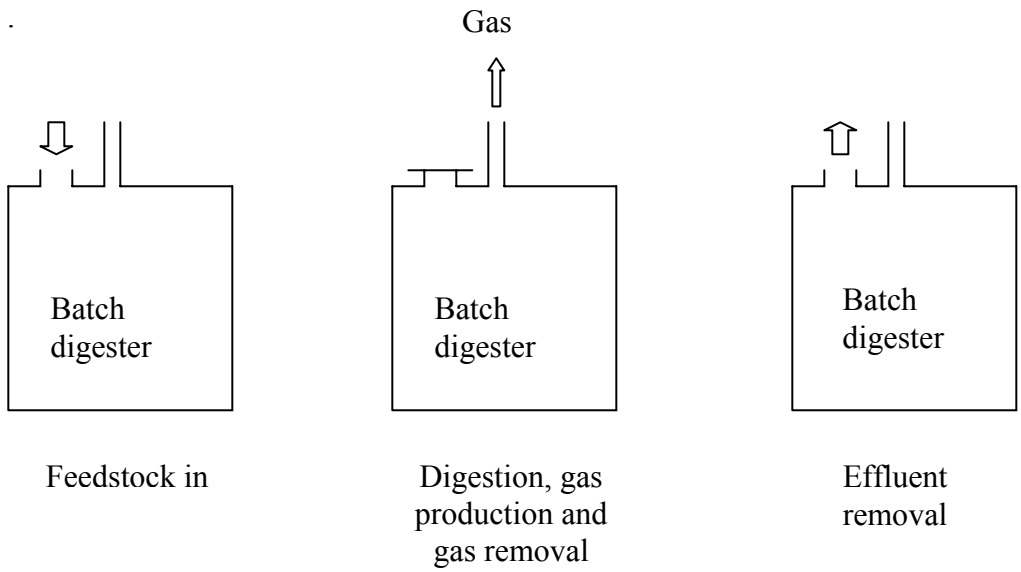

Figure 2. Schematic of a batch digester system (Source: NCAT, 1984)

Continuous – The continuous bioreactor is one where organic matter is constantly added and biogas generation is also constant (gas removal can be achieved without disrupting the operation). It is more suited for large scale operations, such as a dairy farm, where there is a constant supply of organic material. The digested material is either mechanically removed or pushed out by the incoming material. There are three basic types of reactors: vertical tank systems, horizontal or plug flow systems, and multi-tank systems.

In vertical tank systems, loading and unloading of animal manure is usually done at the top of the system. While feed is being added to the system, an equal amount of the processed manure is continually removed from the system. Mechanical mixers (such as a set of baffles located axially at different heights) or agitators are employed to mix the feedstock well (Figure 3).

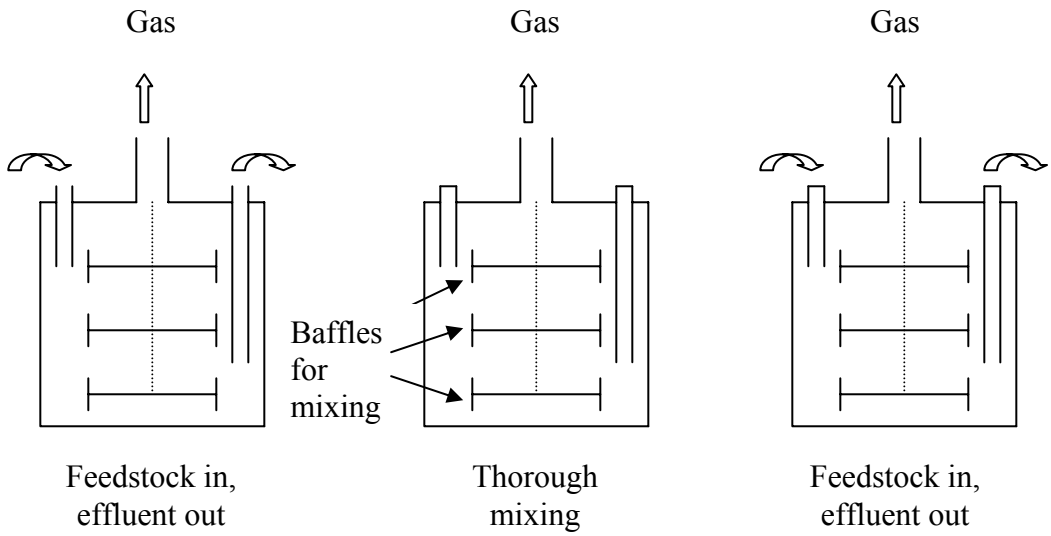

Figure 3. Schematic of a vertical tank digester system (adapted from NCAT, 1984)

In horizontal or plug flow digesters, feedstock added at one end pushes or displaces an equal amount of processed manure from the other end of the system which is typically a large rectangular pit covered by a flexible rubber dome. Rigid, fixed covers can also be used on top. This configuration is especially suitable for beef and dairy cattle manure with about 10% solids. A simple schematic of a plug flow digester is shown in Figure 4.

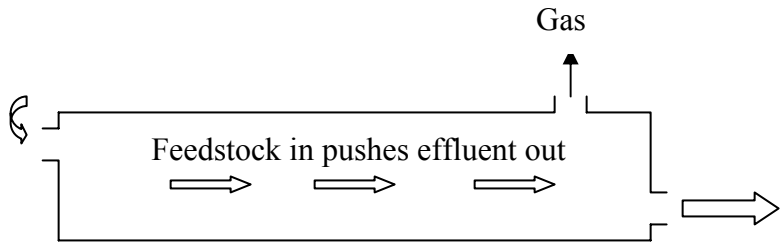

Figure 4. Schematic of a plug flow digester system (Source: NCAT, 1984)

In multiple tank or multiple phase systems, typically 2 tanks are used for digestion: tank 1 or the primary tank is where acidogenesis takes place and the subsequent step of methanogenesis occurs in the secondary tank. A simple schematic of a 2-phase set up is shown in Figure 5.

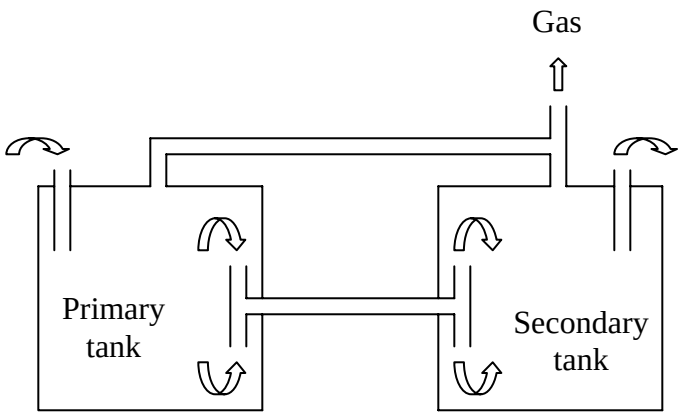

Figure 5. Schematic of a 2-phase digester system (Source: NCAT, 1984)

The chief advantage of this set up is that it allows for higher loading rates without causing digester disruptions. This is because the 2 tanks can be maintained at different pH and temperature conditions suitable for the different types of bacteria and ensures that acetogenic bacteria does not inhibit the functioning of the methanogens, thus increasing process stability. The main disadvantage of such a system is that it can cost 2-3 times more than a single plug flow system.

2 RESEARCH TOPIC IDENTIFICATION

2.1 The Hydrogen Economy: Boon or Bane?

The idea of using hydrogen as an energy carrier has been in the minds of policymakers and scientists for many decades now. The vision of a future hydrogen economy relies upon the availability of affordable and environmentally clean domestic sources for its production, as well as market penetration of applications utilizing hydrogen such as fuel cell vehicles at a competitive price. This vision includes an infrastructure to safely produce, store, transport and deliver molecular hydrogen to end-users such as a vehicle refueling station or in a fuel cell at a power site (stationary or mobile) or in an industrial facility. An array of technological challenges have to be addressed along this chain to realize this vision including the design, construction and maintenance of reformers, compressors, storage facilities, pipelines, trucks and dispensers. The phrase molecular hydrogen is important to be considered because, though hydrogen is the most abundant element in the universe, almost all of it is tightly bound to other elements (such as oxygen in the form of water) and typically a sizeable amount of energy is needed to liberate it for use as a fuel. The US Department of Energy has proposed setting up a national hydrogen highway system with a network of 284 hydrogen refueling stations which can cover 65% of the US interstate highway system (Melendez and Milbrandt, 2006) as shown in Figure 6.

As is obvious from the meaning of the hydrogen economy, challenges abound for producing, transporting and storing and for using molecular hydrogen, especially if concepts of sustainability come into the picture. Dealing with all the challenges is beyond the scope of this research, which is intended to primarily contribute to one source for the sustainable production of hydrogen and address the problem of animal waste management at the same time.

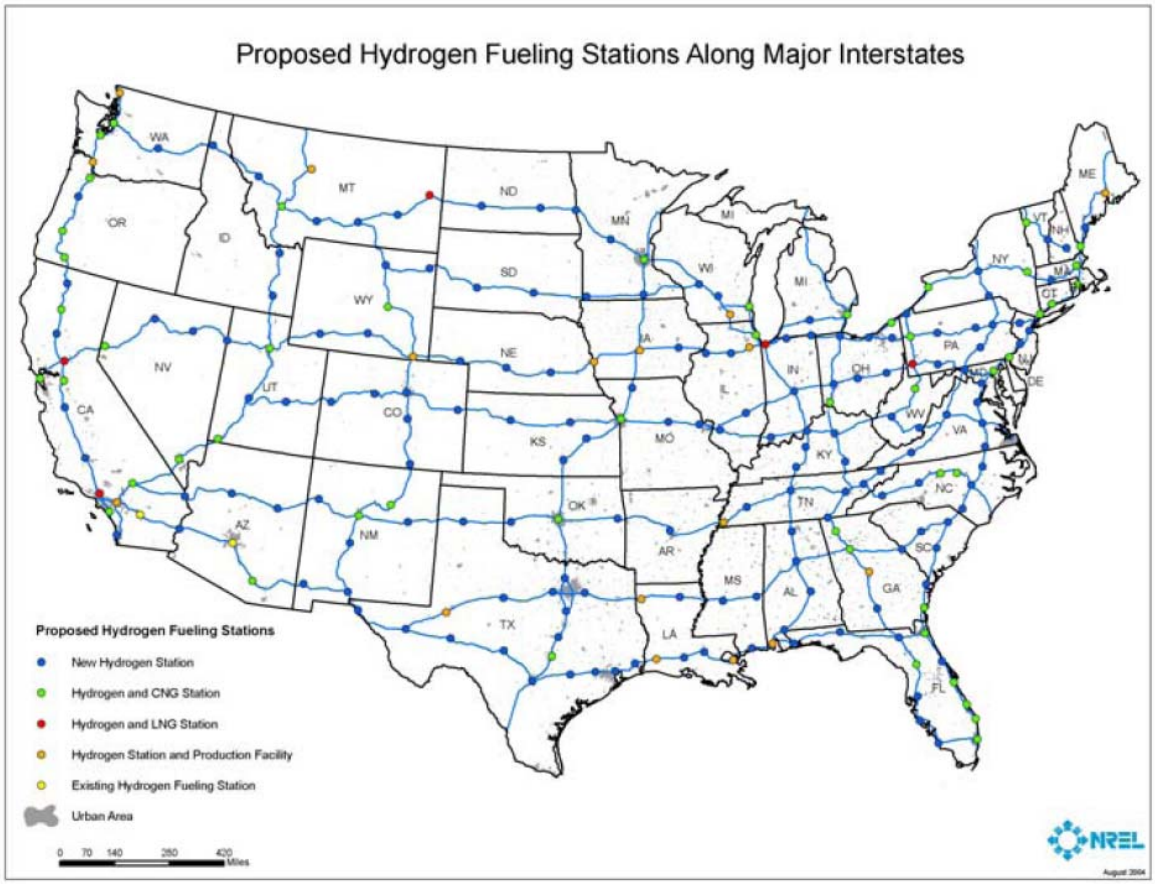

Figure 6. DOE Proposed Hydrogen Fueling Stations (Source: Melendez and Milbrandt, 2006)

There are various mechanisms by which hydrogen is currently being produced, including reforming of natural gas, gasification of coal, electrolysis of water and biological processes. Coal gasification and natural gas reforming are not renewable processes, and as their names suggest, are fossil fuel dependent. Due to the large coal deposits in the US, some researchers claim that coal gasification with CO_2 capture to produce H_2 and electricity can be a good solution to tackle the GHG problem and make economic sense as well (Chiesa et al., 2005; Kreutz et al., 2005). They assume that based on current consumption rates global coal reserves are capable of a 2000-year supply. These two studies analyze plant designs based largely on currently

available technology for co-producing H_2 and electricity from coal with pre-combustion decarbonization, namely the Integrated Gasification Combined Cycle (IGCC). In these studies, it has been assumed that the CO_2 captured can be successfully captured, compressed transported and stored underground at a cost of \$5/tonne CO_2. In spite of its apparent simplicity, IGCC technology is still expensive and only a handful of plants operate around the world utilizing it and there are currently no IGCC plants (nor any coal plants) capturing and storing the CO_2 underground (Kintisch, 2007). According to Johnson (2004), coal-fired public utilities (in the US) are powerful and conservative and will resist changing the way they operate which will be necessary to have an IGCC approach for hydrogen and power production for coal. Schrag (2007) argues that CO_2 sequestration at a national and global scale is needed and at an enormous scale, but not right now before we have addressed technological, economic and more importantly the political challenges to completely understand its dynamics and implications.

Electrolysis of water is energy intensive and unless the energy comes from renewable sources such as wind power or biomass, or non-fossil fuel sources such as nuclear energy, cannot produce 'clean' hydrogen. High-temperature gas-cooled nuclear reactors could be a starting point for short-term large scale hydrogen production (Clery, 2005) and to facilitate transition to the hydrogen economy, but ultimately nuclear reserves are finite and this is not sustainable.

Hydrogen production utilizing solar energy, wind power and geothermal energy has been demonstrated but large scale production from these sources pose technical problems and are likely to be very expensive. Electrolysis of water for hydrogen production using wind energy has received attention from the International Energy Agency (Elam et al., 2003) and according to a DOE study, is the cheapest renewable source for hydrogen production (as reported in Colella et al, 2005). Solar

powered electrolysis for gaseous hydrogen production has been touted as an ideal way to power cars and generate electricity (MacKenzie, 1994). Lab scale hydrogen production from water electrolysis using solar energy from a PV array has been demonstrated (Ahmad and El Shenawy, 2005) but scale-up issues and system economics are important questions that remain to be considered. At present solar-based hydrogen is not thought to be a feasible pathway for the hydrogen economy (NRC, 2004). Solar energy is also not equally available all over the world and the low cost capture, conversion and storage of sunlight still faces technological challenges and cost hurdles (Lewis, 2007). Iceland has successfully been producing sustainable hydrogen by the electrolysis of water to operate a small fleet of hydrogen powered buses for public transportation (Vogel, 2004). This method is almost free from CO_2 emissions since the electricity for the process comes from geothermal and hydroelectric energy. While this has made Iceland optimistic about transitioning to a complete hydrogen economy, the caveat is that most countries are not bestowed with the natural geothermal and hydro resources that Iceland has. Some authors also claim that geothermal energy is not technically renewable since the sources will potentially decline within a century (Youngquist, 1997). Geothermal energy could be considered renewable but is geographically limited in availability. Geothermal energy is also capital intensive and has some environmental pollution associated with it (Chow et al., 2003). Biological production of hydrogen utilizing bacteria has been achieved but only on a laboratory scale. There are many limitations for current technology to tap into biological processes as pathways for future hydrogen production on a large scale such as scale-up issues, H_2 yield, substrate composition and supply, culture impurities, H_2 separation, purification and storage (Levin et al., 2004).

In this context, adapting known technologies such as steam reforming and utilizing hydrogen rich gas such as biogas seems to have potential. Biogas is obtained

as a byproduct from the anaerobic digestion of livestock waste, food waste and biosolids from wastewater treatment plants. Another methane rich gas available in large amounts as a source of hydrogen is gas that can be tapped from landfills. Thus investment in anaerobic digestion and resource recovery technology can serve the dual purposes of pollution abatement and energy generation. To my knowledge there has not been any study reported on utilizing biogas produced from animal waste to produce hydrogen on a large scale as can be done using steam reforming or other well established techniques. In fact according to one definition, the production of hydrogen through steam reforming would probably not even be considered biohydrogen (Janssen et al., 2002). In this study, H_2 produced from the steam reforming route is considered to be biohydrogen and we posit that initial capital investment in thermochemical technologies that utilize organic feedstock will eventually play a key role in future renewable bio-based energy production. There are many studies which use anaerobic fermentative bacteria to produce hydrogen from complex organic substrates. In fact in the traditional anaerobic digestion process hydrogen is an intermediate product produced by acidogenic bacteria which later gets consumed by methanogens to yield methane. Thus, by inhibiting the methanogens, biohydrogen can potentially be produced from organic waste (Sparling et al., 1997; Lay et al., 1999). But methanogen inhibition was done either by heating the sludge (Lay et al., 1999) or by using chemicals like acetylene (Sparling et al., 1997) in a small scale batch setup in the laboratory. In both experiments process economics has not been mentioned and this method needs more research to become viable.

Van Ginkel et al. (2001) have demonstrated hydrogen production from a lab scale synthetic wastewater system, but scale-up, economics etc. haven't been considered. According to Hallenbeck and Benemann (2002), the primary limitations for large scale H_2 production from biological methods are low conversion efficiencies

for biophotolysis and low yields through the anaerobic fermentative metabolic pathways for direct H_2 production. Thus, while more research is needed to enable better yields and better economics from the traditional biohydrogen production route utilizing bacteria, it is perhaps wise to give more serious thought to hydrogen production from organic wastes through well established chemical engineering pathways.

The bulk of today's hydrogen in the US is produced by the steam reforming of natural gas (NREL, 2005). If the entire US economy were to be fueled by hydrogen, the requirements would be about 150 million tons and almost all of it would need to come from water or biomass if sustainability and energy security were taken into consideration (Kennedy, 2004). The National Research Council (NRC, 2004) has analyzed various future hydrogen supply chains in terms of a central location, a midsize scenario and distributed production. They report that even with very optimistic technology improvements, biomass-based hydrogen will be more expensive (and thus less competitive) in comparison with gasoline. In their view, there should either be subsidies for the production of biomass-based hydrogen or more taxes on gasoline to encourage use of biomass-based hydrogen. It should be noted that the NRC study assumes that all biomass-based hydrogen will come from the gasification of energy crops. There are many barriers that need to be crossed once the production challenge has been addressed. One of the major issues is the need for a hydrogen energy infrastructure (in the form of hydrogen vehicles, fuelling stations, etc) to be established and be ready by the time the hydrogen production challenges are resolved. The distribution, dispensing and storage of hydrogen are crucial parameters to be examined, especially in the analysis of hydrogen as a vehicular fuel. Distribution and dispensing costs are expected to be a significant portion of the product cost except when hydrogen is produced locally, akin to distributed generation (NRC, 2004). Since

hydrogen is the lightest element, it requires about 3000 times as much volume as gasoline for an equivalent energy content and hence it has to be compressed or liquefied for practical vehicular applications, but all these forms pose their own challenges (Service, 2004). The creative utilization of the existing energy infrastructure, such as using the natural gas pipeline for hydrogen transportation might be essential and imperative (Ogden, 2004). This dissertation has discussed in detail the costs involved in the laying and installation of pipeline (to transport pipeline quality substitute natural gas from the farm to connect to the existing grid. It should be emphasized here that ultra-pure product H_2 produced from biogas can be used as an industrial and research gas (and not used solely as a vehicle transportation fuel), for which revenues and profits will be much higher. The main challenges with this concept are need for additional capital for H_2 compression and storage, as well as safety and legal considerations, which might deter dairy farmers from going this route. With current advances in membrane technology, hydrogen compression and storage, the formation of dairy farm clusters for centralized hydrogen production and sale as a high value ultrapure industrial gas has the potential to contribute to the rural economic development. The use of mapping techniques for identification of markets for product hydrogen will add value to the systems approach undertaken in this dissertation but was out of the scope of the current work. The use of geographic information systems has been made to identify clusters in NYS and to examine logistics for trucking manure to a central location for community digestion and processing.

2.2 Uniqueness of this Research

The research undertaken is unique primarily because, to the best of the author's knowledge, this study is the first one combining aspects of hydrogen production through thermochemical pathways and exploring the application of these technologies on a large scale by utilizing geographic information systems (GIS). There are only a few studies that have explored the use of biogas for hydrogen production through thermochemical pathways (Komiyama et al., 2006; Chawla and Ghosh, 1992; Pandya et al., 1988; Naumann and Myrén, 1995; Van herle et al., 2004; Effendi et al., 2005) and most of these only use simulated biogas rather than perform experiments on site. Scale-up issues and economic analysis have also been ignored by most of the authors. This study is a thorough and rigorous analysis of biogas to hydrogen production systems and most of the main components associated with it. To the best of my knowledge only one study has explored the utilization of GIS for renewable energy applications based on dairy manure derived biogas (Ma et al., 2005) and there are no existing studies in the literature dealing with geospatial analysis of green hydrogen production from organic residuals. In this context this study is an attempt to contribute to sound science-based creative energy policy with a systemic perspective. The use of visual tools such as GIS is becoming very significant as an effective means to explain energy issues to policymakers and scientists alike.

This study can also serve as a guide to help individual farmers or farm-based energy cooperatives analyze various biogas utilization options. It can also serve as a reference to identify possible sites for community digesters for large scale hydrogen production. To the best of my knowledge this is also the first time the idea of forming clusters for renewable hydrogen production has been proposed.

3 LITERATURE REVIEW

3.1 Biogas Utilization on Dairy Farms across the US

Biogas can be utilized for a variety of purposes, but the most common application on dairy farms in the US tend be related to the generation of combined heat and power (CHP) for on-farm needs (EPA, 2007b). Out of 82 farms surveyed in 2005, 83% were using the biogas for electricity generation (with and without heat), 7% were using it for heat and/or hot water alone, 5% were flaring the gas and for the remaining 5% of the farms there was no data available (EPA, 2006). Figure 7 (see Appendix 1 for details of the digesters) was adapted from data obtained from the AgSTAR Winter 2006 Digest (EPA, 2006).

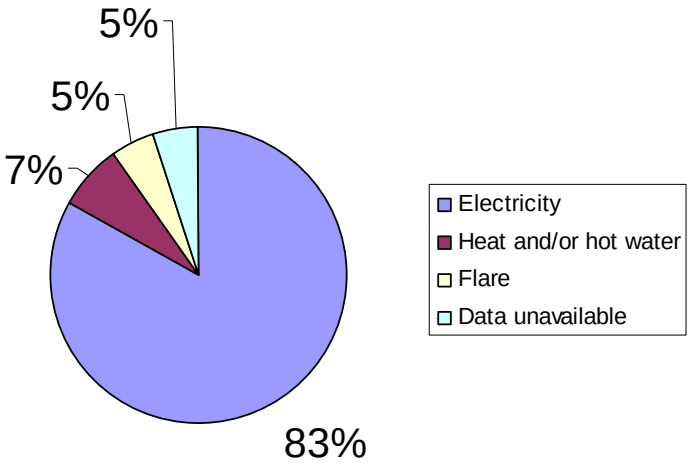

Figure 7. Biogas end use in US digesters as of 2005 (adapted from EPA, 2006)

About half of these digesters are plug-flow and about a quarter are complete mix type operations (EPA, 2006) as shown in Figure 8.

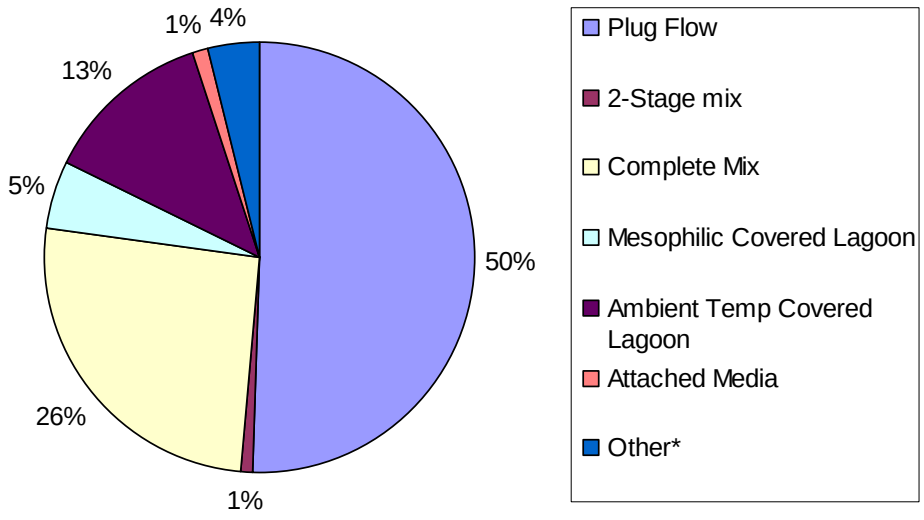

Figure 8. Types of US digesters (operational and start-up/construction) as of 2005 (adapted from EPA, 2006)

Depending on dairy farm size, organic materials added and hence biogas produced, the total electricity capable of being produced on a farm typically exceeds farm needs. Selling this excess electricity to a utility via interconnection to the existing electric grid is an option many farmers choose, but this might not always be the best alternative depending on the electricity pricing mechanism and other regulatory arrangements, (Lazarus and Rudstrom, 2007). The economic analysis depends on a complex matrix of variables including availability of grants or funds to build the digester, price of electricity, net metering contracts and negotiations with the utility and other legal considerations.

Out of the 82 operational digesters in the US as of 2006, 60 were dairy farms and 2 were listed as a combination of dairy/poultry and dairy/swine. Of the 60 dairy farms, 2 were flaring all the gas, 3 were using the biogas for hot water production and flaring a part of it, 2 were using the gas for heat generation and no data was available for 2 farms. In total, 51 dairy farms were using biogas for some combination of electricity, hot water and heat production. There was a wide variation in power production (kW of operational output) as a function of the dairy farm size (see Figure 9). Data for three farms were clear outliers, seemed to be erroneous (farms with head counts of 237, 1000 and 1300 cows reported to be generating power of 900 kW, 1000 kW and 1300 kW respectively) and were not included in the plot. Clearly there is no rigid one to one relationship between farm size and power output perhaps because of the wide variability in individual farm needs for heat and hot water as well as other financial considerations. This reinforces the notion that analysis of biogas applications must be done carefully on a case by case basis.

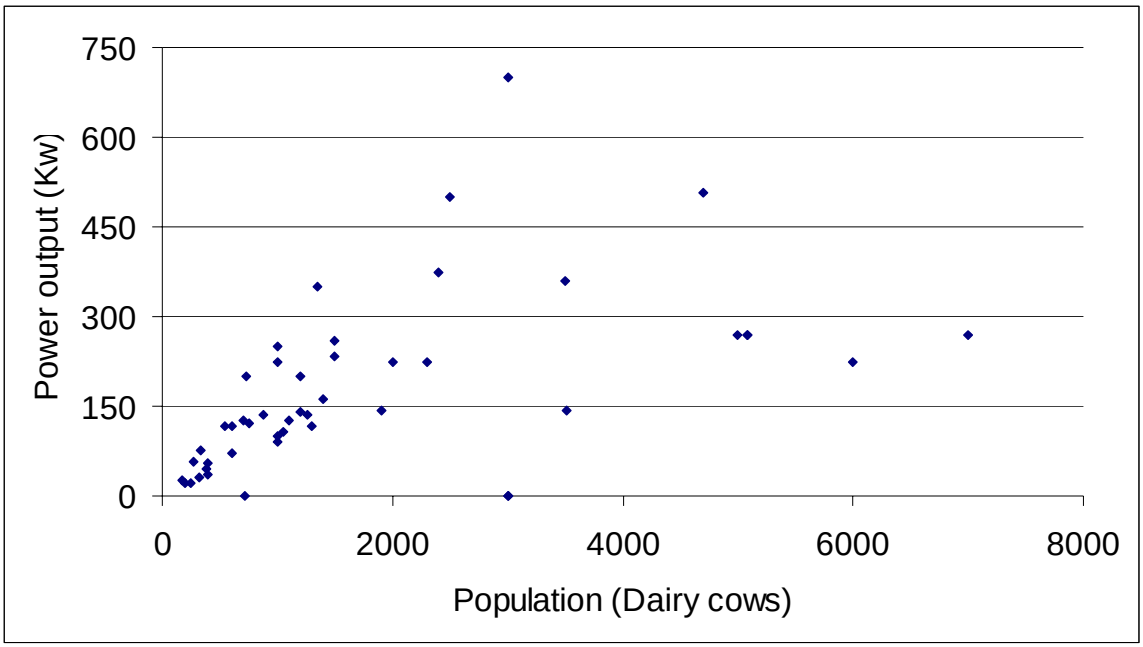

Figure 9. Power production as a function of dairy size (adapted from EPA, 2006)

Most of the biogas produced in the US is thus typically used for electricity and/or heat generation. Even in Europe where the diffusion of biogas production and utilization is more widespread than the US, it seems that the primary focus of governments as well as researchers is geared towards the generation of (combined) heat and power (Hjort-Gregersen et al., 2007). Alternatives to typical engine generator type applications have been proposed and discussed (Mears, 2001). Production of CHP in a fuel cell via autothermal steam reforming of a biogas/bio-oil mixture has been proposed with a host of advantages (Iordanidis et al., 2006; Minott, 2002). Biogas has been demonstrated to be a good transportation fuel when upgraded and compressed and can be used in vehicles with natural gas engines without need for any engine or vehicular modifications (Wellinger and Lindberg, 2000). Murphy et al. (2004) conclude from an environmental and economic analysis (study done in Ireland) that biogas utilization as a transportation fuel (accompanied with CHP production to meet local electricity needs) yields the best overall returns. Other studies have also discussed the technical feasibility and the economics of biogas upgrading to natural gas quality (Jensen and Jensen, 2000; Krich et al., 2005). Though some projects in a few states in the US (Michigan and Texas for e.g.) have been commissioned to inject biogas into the natural gas pipeline (Goldstein, 2007a and 2007b), this option is yet to be adopted on a large scale.

3.2 Hydrogen production from biogas

There have been very few reports and/or publications dealing with actual conversion of biogas to hydrogen either in a lab/proof of concept scale or in a commercial project, especially utilizing a chemical/thermochemical pathway. One reason for this could be the high initial investment needed. The feasibility and other technological aspects of producing hydrogen from methane/ natural gas have been

well studied and documented. The utilization of methane for small scale production of hydrogen holds promise for animal feeding operations where relatively small quantities of methane can be made available by anaerobic digestion. The major drawback is that typical commercial reformers (or other type of reactors) available in the market are not suited for small scale hydrogen production. The high cost of initial capital is a barrier for operations which have the potential to generate sizeable quantities of biogas (large animal feeding operations, food processors, landfill gas operators, wastewater treatment plants etc). Shiga et al. (1998) comprehensively analyze options for large-scale production of H_2 from biogas and perform detailed economic analysis for different scenarios. They investigated the feasibility of collecting biogas produced in small scale digesters from villages in India which would then be transported via pipeline to regional collection centers and then processing it at a centralized location (which they term an industrial center) and shipping H_2 to Japan. The authors estimate a production cost of 310 Yen GJ^{-1} equivalent of H_2 in the industrial centers or approximately \$0.4 kg^{-1} of H_2 in 2008.[1] They conclude that this option is indeed a viable one but since the study was done with economic considerations applied to villages in India and shipping to Japan, it is not very easy to adapt it to a US setting. Several other studies that explore utilizing biogas as a source of hydrogen generation do not discuss the economic and the systems aspects of the process but only detail the technical considerations. Only a few studies report research done with actual biogas from organic residues. Most authors use a mixture of

[1] In 1998, the US dollar to Japanese yen conversion was around \$1 to ¥ 117 – ¥ 145 according to data published in the website of the Federal Reserve Bank of St. Louis (FRB, 2008). This would have corresponded to a production cost in 1998 of around \$2.10 – \$2.60 per GJ^{-1}. Noting that 1 GJ corresponds to approximately around 7.05 kg H2 (DOE, 2008a), assuming the high heating value of H_2, this would have cost around \$0.30 to \$0.37 per kg in 1998 or around \$0.39 to \$0.48 per kg in 2008, adjusting for inflation (BLS, 2008).

CO_2 and CH_4 as simulated biogas (Komiyama et al., 2006) and don't deal with the economics of the actual 'organics to energy' systems and the cleanup issues involved.

Some researchers however have used actual biogas and considered cleanup as well as some economic aspects. Chawla and Ghosh (1992) describe hydrogen production from real biogas through steam reforming and water gas shift for use in a Phosphoric Acid Fuel Cell (PAFC) for electricity production. They examined the effect of CO_2 in the biogas on CH_4 conversion, H_2 yield and the CO content in the PAFC anode. These issues are important especially if biogas were to be directly used for hydrogen generation (without removal of CO_2) similar to what has been envisioned at AA Dairy. Steam reforming is energy intensive and other conversion routes such as indirect partial oxidation and autothermal reforming (ATR) merit consideration. The authors however don't discuss these mechanisms. Pandya et al. (1988) also use a real biogas system coupled with a PAFC for electricity generation. The authors perform an economic analysis, but only to estimate PAFC costs that will make biogas derived electricity prices comparable to the grid price. Cleanup and other system costs have not been investigated for overall process economics.

Another study using actual biogas reports that biogas was a better source for H_2 production than pure methane because the CO_2 present in the biogas enhanced H_2 production due to the reaction of CH_4 with CO_2 (Naumann and Myrén, 1995). A study of a biogas system (20 cattle family operated unit) in Switzerland which used a solid oxide fuel cell (SOFC) for cogeneration reported electrical and thermal efficiencies of 33% and 57% respectively (Van herle et al., 2003). Biogas from a sewage treatment plant has also shown to be a good candidate for improved electrical efficiency (over 48%) by external reforming and further use of an SOFC (Van herle et al., 2004). Small scale power can possibly be realized using SOFCs which are more tolerable to contaminants like H_2S and CO. Steam reforming and the shift reactions

are shown to be highly efficient methods of converting simulated biogas to hydrogen with > 98% of CH_4 converted to H_2 (Effendi et al., 2005), but again no cost analysis and scale-up issues were mentioned. Duerr et al. (2007) also propose using fuel cells for CHP as an alternative to engine-generator systems for better efficiency, but recommend using an alkaline-based fuel cell system (due to the low freezing point of the KOH electrolyte) for the island of Mull in Scotland. Though they acknowledge high costs for the reformer and fuel cell system, they have not done a comprehensive economic analysis.

Dry reforming of CH_4 has sometimes been claimed as a better way of converting the CH_4 into H_2 since this process utilizes the CO_2 present in the biogas as a reactant for the conversion. Dry reforming of biogas in a permeable reactor coupled with a solid oxide fuel cell (SOFC) is shown as a creative way to generate electricity (Vasileiadis and Ziaka-Vasileiadou, 2004), but no economic analysis has been done in the study. Also, electricity might not be the best option for H_2 utilization since the returns are shown to be not very high as compared to utilizing the H_2 as an industrial gas (Van Ginkel et al., 2005). Lab scale internal dry reforming of real biogas to produce power through an SOFC has also been demonstrated (Staniforth and Ormerod, 2002), but this study concludes that maximum power is produced when the CH_4 content is 45% and decreases for CH_4 contents beyond 45%. It should be noted that typical biogas CH_4 content is around 60%.

Technical details of the dry reforming of methane for small scale production of hydrogen have also been described by Ferreira-Aparicio et al. (2005), but there is no mention of the costs involved in such an operation. The authors also suggest that high H_2 recovery is obtained from gas mixtures with CO_2/CH_4 ratios close to 2, but it should be kept in mind that the typical CO_2/CH_4 ratio in biogas is close to 0.65. Thus

the practicability of dry reforming of a methane-rich gas like biogas needs more examination.

3.3 Use of Geographical Information Systems for Bionergy Development

Geographical Information Systems (GIS) and related mapping tools have been used to study aspects of waste management and energy generation specifically bioenergy production for a while now and the technology is quite mature today. Batzias et al. (2005) describe a GIS-based livestock manure assessment tool which can be used to estimate regional distribution of biogas potential in Greece from all types of livestock residues. They extend this study to investigate the feasibility of upgrading biogas to pipeline quality gas and injecting it to the national gas pipeline grid. Dagnall et al. (2000) describe a GIS based tool to aid site centralized AD plants for CHP production in the UK. Spatial analysis of biogas potential in rural Southern India has been done by Ramachandra (2008). Panichelli and Gnansounou (2007) use a GIS-based siting study to locate bioenergy production facilities in Northern Spain but their main focus is on gasification of forest wood residues for electricity generation.

In the US, a comprehensive spatial analysis to analyze the potential of dairy manure-derived biogas as a source of renewable energy (mainly production of CHP) has been conducted by Ma (2002). Ma (2006) and Ma et al. (2005) also extend this work to examine siting options for farm-based centralized AD systems by taking into consideration various constraints. Modeling and analysis in the US specifically exploring H_2 production and distribution for a future hydrogen economy have been done by the National Renewable Energy Laboratory of the USDOE. A GIS-based analysis estimates that renewable sources (including wind, solar and biomass) can contribute to the production of approximately one billion metric tons of H_2 per year in the US (Milbrandt and Mann, 2007). It should be noted that the umbrella term of

biomass includes all types of feedstock as well as all types of technologies to convert it to H_2. There are not many studies that deal directly with animal manures as an important feedstock for H_2 production in the US.

3.2 An Overview of Hydrogen Production Methods

Hydrogen can be produced in several different pathways. Classification of hydrogen production can be made according to either process or primary resource and is broadly outlined in Table 1 (adapted from Orecchini, 2006 and DOE, 2005a):

Table 1: Common hydrogen production pathways

Production by process	**Production by primary resource**
Thermal/thermochemical processes that use a chemical reaction and require heat for hydrogen extraction, e.g. steam reforming, pyrolysis, gasification, partial oxidation, thermolysis	**Nonrenewable resources** natural gas coal oil
Electrolytic/electrochemical processes that utilize electricity for hydrogen extraction, e.g. electrolysis using renewable sources of electricity, nuclear high-temperature electrolysis	**Renewable resources** biomass water
Biochemical processes that utilize bacterial or biological means to produce hydrogen, e.g. anaerobic digestion	
Photolytic processes that use light energy to extract hydrogen specifically from water, e.g. photobiological water splitting and photoelectrochemical water splitting	

It should be noted that other primary renewable resources such as wind, solar energy, hydro energy and geothermal energy and nonrenewable resources like nuclear

energy can also be used as energy sources to produce hydrogen with or without utilizing fossil fuels. This chapter will provide an overview and a brief description of the current hydrogen production methods adopted worldwide but mainly focusing on thermal/thermochemical pathways utilizing natural gas as the feedstock. This will serve as a good way to comparatively examine these systems with future biogas based hydrogen systems in NYS. Currently close to 48% of the global hydrogen production uses natural gas for feedstock (NRC, 2004) through steam methane reforming (Turner, 2004). The rest of the global hydrogen is typically produced using oil (30%), coal (18%) and water (via electrolysis) (4%) as the feedstock (DOE, 2005b). In 2004, the US produced 17.7 billion m^3 of hydrogen (Chemical and Engineering News, 2005). Global hydrogen production in 2004 was about 550 billion m^3 (Krongold, 2004). Some of the typical routes for hydrogen production from natural gas as well as some novel ideas for H_2 production will be discussed in this chapter.

3.2.1 Hydrogen from natural gas

3.2.1.1. Steam reforming of natural gas

Steam reforming of natural gas, also termed steam methane reforming (SMR) is currently the cheapest and the most common route for hydrogen production (Crabtree et al., 2004; IEA, 2004). In this process, hydrogen is produced from natural gas in a series of steps namely steam reforming, water gas shift reaction and hydrogen purification as shown in Figure 10 (adapted from Ogden, 1999).

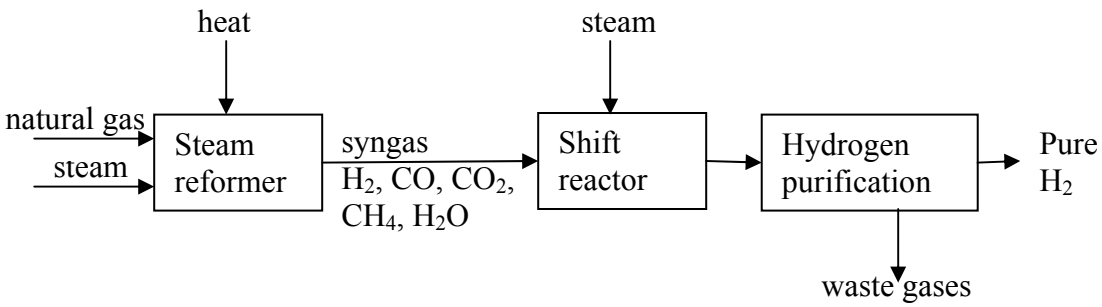

Figure 10. Steam reforming of natural gas for hydrogen production (adapted from Ogden, 1999)

The basic reactions are given below (ΔH values given at 298°K) (taken from Trimm and Önsan, 2001).

Steam reforming: $CH_4 + H_2O \leftrightarrow CO + 3H_2$, $\Delta H = +206.2$ kJ/mol (1)

$$CH_4 + 2H_2O \leftrightarrow CO_2 + 4H_2, \Delta H = +165 \text{ kJ/mol} \quad (2)$$

The steam reformation reactions (1) and (2) are endothermic and need external heat to be supplied to the system. Optimum reaction conditions are 700 – 850°C temperature and 3 – 25 atm pressure (Ogden, 1999). Heat for the reformation reaction is typically supplied primarily by the off gases from the hydrogen purification stage, with some of the feedstock natural gas supplying the balance (Spath and Mann, 2001). The CO produced after reformation is typically used to produce more H_2 via the water gas shift reaction (ΔH values given at 298°K) (taken from (Trimm and Önsan, 2001).

Water gas shift reaction: $CO + H_2O \leftrightarrow CO_2 + H_2$, $\Delta H = -41.2$ kJ/mol

In a typical oil refinery operation which requires hydrogen production in the order of tens of million standard cubic feet per day, the natural gas is pretreated in a hydrogenation tank to convert most sulfurous compounds present in the natural gas to H_2S which is then removed in a ZnO bed. Typical biogas operations will have to deal with a similar pretreatment process to remove most of the H_2S, since biogas from anaerobic digesters typically have 2000 – 5000 ppm H_2S. Most industrial units also provide a high temperature shift reaction followed by a low temperature shift reaction after the reformation reaction, where 92% of the CO is converted to H_2 (Spath and Mann, 2001). The reformation reaction needs a steam input at 2.6 MPa (380 psi) but yields steam at around 4.8 MPa which has the potential to bring revenues (or carbon credits) if it could be sold to a close by facility that needed it.[2] Based on whether the steam requirements and steam credits are taken into consideration, the energy efficiency (defined below) ranges from 70% to 90%.

Energy efficiency = (energy in product H_2 + 4.8 MPa steam energy exported)/(natural gas energy + electricity + 2.6 MPa steam energy required).

The flow diagram for a typical industrial unit is shown in Figure 11.

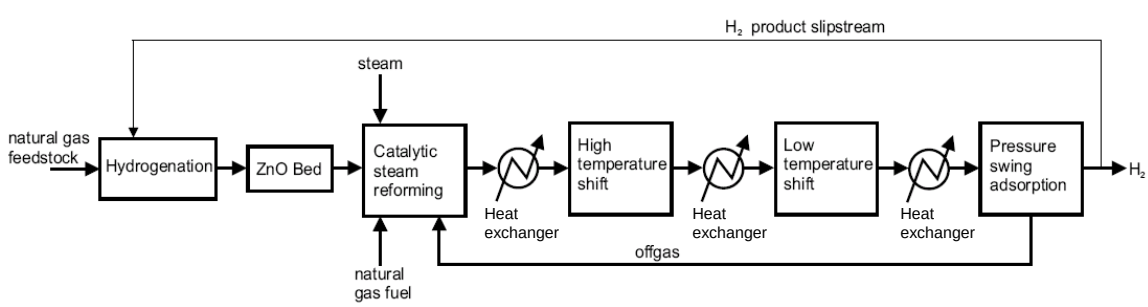

Figure 11. Hydrogen plant for typical industrial application (Source: Spath and Mann, 2001)

[2] See Spath and Mann, 2001 for a detailed analysis of the different definitions of efficiency.

The steam reforming reaction is endothermic and the hot syngas from the reformer exit is cooled before the water gas shift (WGS) reactors. This is because the WGS reaction is exothermic and the equilibrium CO conversion is highest at lower temperatures. In most industrial units the cool down is achieved in 2 stages and hence the need for the high temperature shift (HTS) reactor with Fe-Cr catalysts and the low temperature shift (LTS) reactor with Cu-Zn-Al catalysts (Patt et al., 2000). Shift reactors are of paramount importance to reduce CO which can poison the catalysts of downstream proton exchange membrane fuel cell applications. With shift reactors accounting for close to a third of the mass, volume and cost of fuel processing systems, Patt et al. (2000) have proposed the use of molybdenum carbide catalysts instead of the regular Cu-Zn-Al catalysts to reduce the size, weight and cost of WGS reactors.

It should be noted that high hydrogen purification can also be obtained using membrane technology in lieu of pressure swing adsorption (PSA) (Gryaznov, 2000; Paglieri and Way, 2002). A review of the use of very thin film metal membrane reformers specifically for use with Proton Exchange Membrane Fuel Cells (PEMFC) is provided by Uemiya (2004).

Even though it is envisioned that the hydrogen economy will make use of hydrogen as a fuel which burns cleanly, the production of hydrogen by conventional means such as steam reforming is accompanied by greenhouse gas emissions. Novel processes such as chemical-looping combustion have been proposed to capture CO_2 from large hydrogen production plants which utilize SMR of natural gas (Rydén and Lyngfelt, 2006). This is a unique method where the fuel and air don't come into direct contact but the transfer of O_2 is established via a carrier. In this way, the only products of fuel combustion are CO_2 (without N_2, which is expensive to separate) and H_2O which is easily removed using a condenser. Liu et al. (2002) have proposed low

temperature SMR where unconverted CH_4 is burnt to supply the heat for the reforming reaction with a Ni/Ce – $ZrO_2/\theta\text{-}Al_2O_3$ catalyst.

Non-catalytic Partial oxidation of natural gas

As discussed in the previous section, typical SMR units for hydrogen production from natural gas need a unit to remove H_2S to avoid catalyst contamination downstream. This is usually done via one of several physico-chemical separation methods such as (ZnO beds or the use of amine solvents) which are typically expensive. To avoid this step, the non-catalytic partial oxidation (NCPO) of natural gas is sometimes preferred. The basic reactions can be given as (Abdel-Aal and Shalabi, 1996):

$$CH_4 + \tfrac{1}{2} O_2 \rightarrow CO + 2H_2$$

$$CH_4 + O_2 \rightarrow CO + H_2O + H_2$$

The first reaction given above occurs as a result of the complete oxidation of CH_4 (which produces CO_2) followed by the reaction of excess CH_4 with CO_2 and H_2O to yield syngas (Abdel-Aal and Shalabi, 1996) as shown below:

Complete oxidation: $CH_4 + 2O_2 \rightarrow CO_2 + 2H_2O$

$$CH_4 + CO_2 \leftrightarrow 2CO + 2H_2$$

$$2CH_4 + 2H_2O \leftrightarrow 2CO + 6H_2$$

Net reaction: $4CH_4 + 2O_2 \rightarrow 4CO + 8H_2$

This is stoichiometrically equivalent to the partial oxidation reaction shown above. Since the proposed NCPO schema obviates the H_2S cleaning step, the H_2S present in the natural gas gets converted to SO_2 via the following reactions (Abdel-Aal and Shalabi, 1996):

$3H_2S + 1.5O_2 \rightarrow SO_2 + H_2O + 2H_2S$

$2H_2S + SO_2 \rightarrow 3S + 2H_2O$

$S + O_2 \rightarrow SO_2$

Another advantage of NCPO is that the exit gas stream from the combustion chamber containing SO_2 can then be scrubbed with H_2O to yield an aqueous solution of SO_2 which is then used in the 'Westinghouse' process to produce H_2SO_4 and more H_2:

$2H_2O\ (liq) + SO_2\ (aq) \rightarrow H_2SO_4\ (liq) + H_2\ (g)$

The feasibility study of Abdel-Aal and Shalabi (1996) was extended by Abdel-Aal et al. (1999) where theoretical simulation studies of NCPO of natural gas have been performed. The authors provide a thorough analysis of the process thermodynamics and stoichiometries and make recommendations for optimum operating parameters. However kinetics, reactor characteristics and process economics haven't been considered by the authors. Calcott and Deague (1977) have patented a non-catalytic

partial oxidation reactor system where primary fuel (LPG) is mixed with air/O_2, set to a high swirl via a nozzle system and then combusted whereby CO_2 and H_2O are produced. The resulting gaseous mixture is then reacted with a secondary fuel (LPG again) downstream of the combustion chamber to produce syngas virtually free of CO_2 and H_2O. A basic set-up for NCPO of natural gas for hydrogen production along with H_2SO_4 production is given in Figure 12 (Abdel-Aal et al., 1999). The major disadvantages of using the NCPO schema are that the reactor is expensive and product hydrogen purity is much less compared to SMR (Brown, 2001).

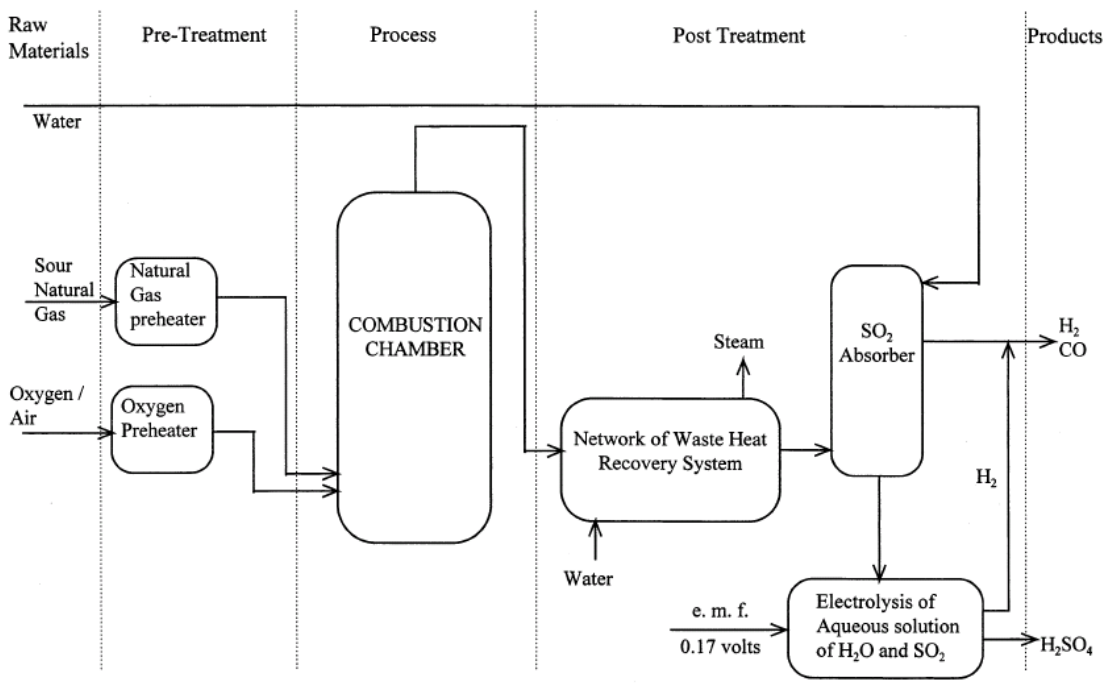

Figure 12. Non-catalytic partial oxidation of natural gas for co-production of hydrogen and sulfuric acid (Source: Abdel-Aal et al., 1999)

Catalytic Partial oxidation of natural gas

The catalytic partial oxidation (POX) of methane (sometimes also referred to as the direct oxidation of methane) has been gaining prominence as a way to produce

syngas (and therefore hydrogen) over the last two decades (Hickman and Schmidt, 1993; Freni and Cavallaro, 1999). The inherent mechanism of partial oxidation has been studied and debated for many years and there are basically two alternative pathways that have been proposed: a) an indirect pathway which involves strong exothermic methane combustion (total oxidation of a quarter of the CH_4) followed by strongly endothermic methane reforming, including both steam reforming and CO_2 reforming (Prettre et al., 1946; Ashcroft et al., 1990) and b) a direct pathway where syngas is the primary product without the intermediate production of CO_2 and H_2O.

Mallens et al. (1995, 1997) examined POX of CH_4 over Pt and Rh sponges in 2 separate studies and conclude that POX takes place via the direct mechanism whereby $CO + H_2$ is produced directly from CH_4 via O_2 present as platinum oxide (in the study using Pt sponge) and as rhodium oxide and chemisorbed oxygen species (in the study using Rh sponge).

The basic overall reaction that has been proposed for hydrogen production through the direct partial oxidation of natural gas is given below (ΔH values given at 298°K) (taken from Trimm and Önsan, 2001).

Partial oxidation: $CH_4 + \frac{1}{2} O_2 \rightarrow CO + 2H_2$, $\Delta H = -35.7$ kJ/mol

The steps for the indirect POX of methane can be represented as (ΔH values given at 298°K) (taken from Trimm and Önsan, 2001):

Complete oxidation: $CH_4 + 2O_2 \rightarrow CO_2 + 2H_2O$, $\Delta H = -802$ kJ/mol

Steam reforming: $CH_4 + H_2O \leftrightarrow CO + 3H_2$, $\Delta H = +206.2$ kJ/mol

Carbon dioxide reforming: $CH_4 + CO_2 \leftrightarrow 2CO + 2H_2$, $\Delta H = +247$ kJ/mol

POX is exothermic (and doesn't need an additional heat input) and has obvious advantages over SMR since the latter is energy intensive. An important advantage of using POX for H_2 production is that, for the same production rate the size of a POX reactor is two to three orders of magnitude smaller than an SMR because POX reactors can operate at gas hourly space velocities two to three orders of magnitude higher than an SMR (Williams et al., 2005). POX reactors can also be ignited from room temperature in less than 10 seconds after which they achieve autothermal (no need for external process heat) conditions where millisecond reaction times (contact times for reactants on catalysts to produce products) can be obtained (Leclerc et al., 2001). POX also has the potential to reduce CO_2 in the product stream which is typically expensive to separate downstream (York et al., 2003). Over decades of research, many families of catalysts were investigated for POX: supported Ni, Co or Fe catalysts; supported noble metal (Group VIII) catalysts, perovskite oxides and pyrochlores, and transition metal carbide catalysts (Tang et al., 1998; York et al., 2003).

Coke formation on catalysts is typically an issue but the noble metals (especially Rh, Ru, Ir and Pt) have been found to resist carbon deposition much better than the Ni based catalysts (Claridge et al., 1993). However, by utilizing 'severe' thermodynamic conditions (higher CH_4/O_2 ratio than the stoichiometric ratio) Tang et al. (1998) show that a POX system with Ni/MgO catalyst (Ni loading of 13% by weight) exhibited a high resistance to carbon deposition. Another problem with POX is the uneven temperature profile across fixed bed POX reactors due to the formation of hot spots and the 'cooler' downstream sections of the reactor which can be an issue

with catalyst performance, stability and obtainable methane conversion (Ioannides and Verykios, 1997). To overcome the heat management issues in conventional fixed bed reactors, other reactor configurations have been explored. These include fluidized bed reactors (Bharadwaj and Schmidt, 1994), dual bed and mixed bed catalyst reactors (Ma and Trimm, 1996; Tong et al., 2005), membrane reactors (Ioannides and Verykios, 1996), and other novel designs such as the heat-integrated wall reactor (Ioannides and Verykios, 1997). POX of natural gas in a spark-ignition engine for syngas/H_2 production has been demonstrated to additionally provide significant engine shaft power for electricity generation as well as yielding recoverable energy as sensible heat (McMillian and Lawson, 2006). An overview of such a system is shown in Figure 13 (McMillian and Lawson, 2006).

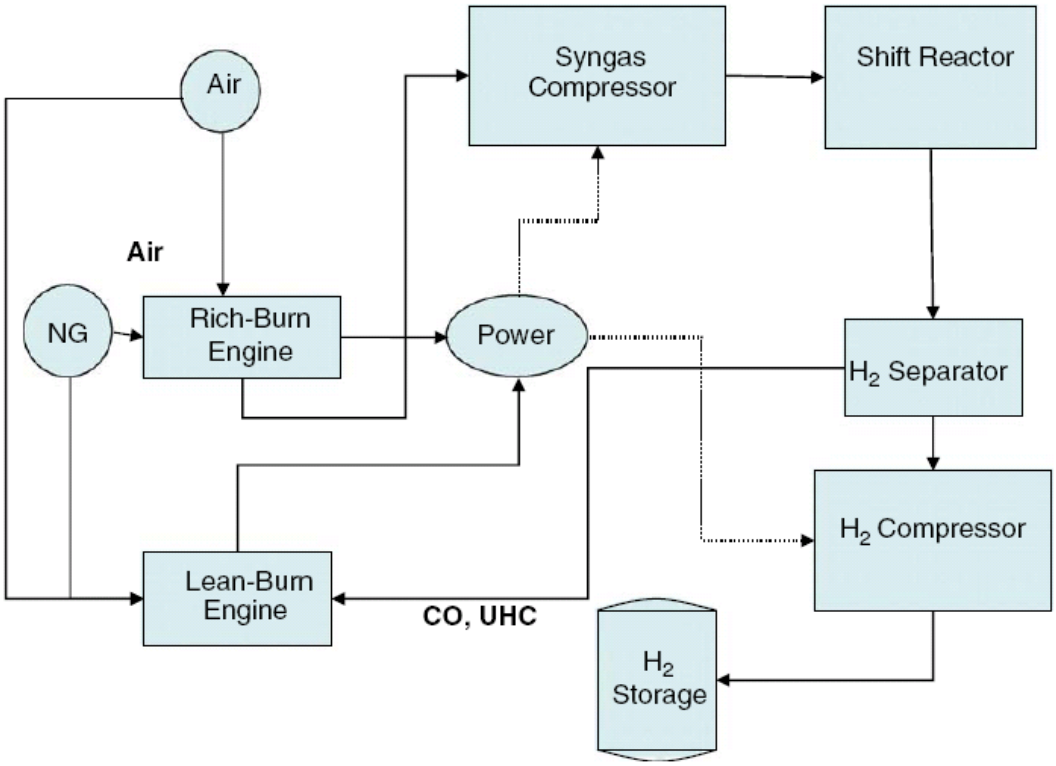

Figure 13. Overview of POX hydrogen production and storage system (Source: McMillian and Lawson, 2006)

The main disadvantage of POX of CH_4 to syngas production is the need to use a very pure O_2 stream (to avoid N_2 from air) for the reaction and the need for cryogenic O2 plants (Dyer et al., 2000). The use of dense mixed conducting membranes for O2 permeation followed by POX (Yaremchenko et al., 2003) and ion transport membranes for conduction of oxygen ions (Dyer et al., 2000) has been proposed as cheaper alternatives.

Autothermal reforming of natural gas

Autothermal reforming (ATR) is the process of combining partial oxidation and steam reforming adiabatically (no heat required, since heat produced from the exothermic POX is utilized for the endothermic SMR) and typically involves low investment and simple reactor designs (Christensen and Primdahl, 1994). ATR is an ideal process to get suitable H_2/CO mixtures for on-board hydrogen production using natural gas as a fuel especially because of the compact reactor needed with a low pressure drop (Farrauto et al., 2003). The basic reactions involved in ATR can be summarized as simultaneous POX and SMR typically accompanied by WGS (ΔH values given at 298°K) (taken from Trimm and Önsan, 2001):

Partial oxidation: $CH_4 + ½\ O_2 \rightarrow CO + 2H_2$, $\Delta H = -35.7$ kJ/mol

Steam reforming: $CH_4 + H_2O \leftrightarrow CO + 3H_2$, $\Delta H = +206.2$ kJ/mol

Water gas shift reaction: $CO + H_2O \leftrightarrow CO_2 + H_2$, $\Delta H = -41.2$ kJ/mol

ATR typically consists of mixing all 3 components of the process – fuel, air and steam at the process inlet as opposed to conventional SMR (external burner used to heat the stem-fuel mix) or POX (fuel-air mixed at inlet followed by downstream steam addition for the water gas shift reaction (WGS)) (Lutz et al., 2004). Hence, part of the heat from the strongly exothermic POX is immediately taken up by the SMR. As a result this is a low temperature process with many advantages such as more favorable WGS reaction; less start-up fuel consumption; lower manufacturing cost for reactor as well as wider range of material for reactor; less requirements for insulation leading to less cost and smaller size, all of which make it an ideal technology choice for on-board fuel reforming for vehicular applications (Ahmed and Krumpelt, 2001).

Chan and Wang (2000) discuss how the equilibrium product composition and the equilibrium temperature are dependent on the air-fuel ratio (A/F) and the water-fuel ratio (W/F). According to the authors the 2 dominant reactions in ATR are the POX and the WGS reactions. They also mention that the optimum operating regime for maximum H_2 yields is a molar A/F of 3.5 and a molar W/F between 2.5 and 4. Under these conditions, the product stream will have a H_2 mole fraction of 36.5% and the yield will be around 2.22 moles H_2 per mole natural gas.

Since ATR is a combination of POX and SMR, the catalysts used for POX can be utilized for ATR as well. The Group VIII transition metals especially Ni, Pt, Pd, Rh, Ru and Ir are claimed to be good catalysts for ATR (Dias and Assaf, 2004). Hoang et al. (2006) report methane conversion rates of 95-99% accompanied by a H_2 yield of 39-41% (dry basis) with one mole of CH_4 producing 1.8 moles of H_2 by using a sulfide nickel catalyst for ATR. Dias and Assaf (2004) also report that the addition of very small amounts of Pt, Pd and Ir into $Ni/\gamma Al_2O_3$ increased the CH_4 conversion in ATR by increasing the area of the metal surface area. The use of a Ni-Pt bimetallic catalyst was shown to perform better than separately blended Ni and Pt in the same

bed (Ma and Trimm, 1996). The investigators theorized that Pt catalyzed the POX reaction and the Ni catalyzed the SMR reaction and the heat transfer between the 2 sites was enhanced.

The major disadvantages of ATR are the need for expensive catalysts, and unavailability in the market of small sized reactors suited for dairy applications.

Dry reforming of natural gas

Dry reforming or carbon dioxide reforming (CDR) of natural gas is typically used to produce synthesis gas with low H_2/CO which is preferred for liquid hydrocarbon production via the Fischer-Tropsch reaction (Trimm, 1977). It has also been hailed as a CO_2 consuming reaction (Ashcroft et al., 1992). The basic reaction can be represented as (ΔH values given at 298°K) (taken from Trimm and Önsan, 2001):

Carbon dioxide reforming: $CH_4 + CO_2 \leftrightarrow 2CO + 2H_2$, $\Delta H = +247$ kJ/mol

The basic CDR reaction was investigated by Fischer and Tropsch in 1928 and they recommended Ni and Co as catalysts (Rostrup-Nielsen and Bak Hansen, 1993). A big disadvantage of CDR is the tendency for coke formation which deactivates and destabilizes the catalyst (Udengaard et al., 1992). This is mainly because of the following undesirable side reactions (Choudhary et al., 1998):

$2CO \rightarrow C + CO_2$

$CH_4 \rightarrow C + 2H_2$

The role of catalyst supports (with commercial Ni catalyst) was investigated and their choice found to be important (Gadalla and Bower, 1988). Ni over La_2O_3 as a support was reported to be stable over long periods of use in CDR even at low reaction temperatures, but the proper preparation and activation of the catalyst is a key issue (Verykios, 2003). The use of a fluidized bed reactor for CDR with Ni/MgO-SiO_2 catalyst has been demonstrated to inhibit carbon deposition on the catalyst (Jing et al., 2006). Noble metal catalysts have been investigated for CDR and have been shown to have higher selectivity than Ni based catalysts (Richardson and Paripatyadar, 1990; Rostrup-Nielsen and Bak Hansen, 1993). The role of catalyst support as well as catalyst particle size for CDR utilizing Rh as a catalyst has been emphasized (Zhang et al., 1996), even though the role of the support for Rh based CDR has been claimed to be minimal (Bitter et al., 1998). The use of Pt with a Zirconium oxide support for CDR has been reported to be favorable since there is very less coking along with high catalyst stability and selectivity, added to the fact that Pt is relatively cheap and easily available compared to Rh (Bitter et al., 1997). The use of perovskite-type mixed metal oxide catalyst (especially $CoNdO_x$, with Co/Nd = 1) has also been claimed to be an excellent choice for carbon-free CDR along with high activity and selectivity (Choudhary et al., 2005). The catalyst used in the study was metallic cobalt dispersed on an Nd_2O_3 support.

Research has been done to combine the exothermic POX reaction with the endothermic CDR reaction. This has been claimed (using Co/MgO as a stable and efficient catalyst) to be safer (avoidance of hot spots of POX), more energy efficient and better suited to use the CO_2 present in natural gas (Ruckenstein and Wang, 2001). The use of Pt/γ-Al_2O_3 for combined CDR and POX has also been investigated and has been claimed to be effective (Larentis et al., 2001). The simultaneous use of POX and CDR using NiO-CaO was shown to have high conversion, high H_2 and CO selectivity,

high CO productivity and high catalyst stability (with minimal coke formation) with high energy efficiency (Choudhary et al., 2005). The combination of CDR and SMR over NiO-CaO has been examined with almost complete conversion, high H_2 and CO selectivity and very low coke deposition on the catalyst (Choudhary and Rajput, 1996). Choudhary et al. (1996) have also investigated the combination of POX with simultaneous SMR and CDR using $LaNiO_3$ perovskite as the catalyst and have reported high conversion, high selectivity and high energy efficiency along with good catalyst stability.

A recent study using the CoO_x/CeO_2/SA-5205 catalyst system for combined POX and CDR has been shown to have high selectivity and good energy efficiency along with low rate of coking (Choudhary et al., 2006). The use of silica membrane reactors to attain selective H_2 permeance during combined CDR and POX has also been reported (Ioannides and Verykios, 1996). A novel molecular level simulation technique has been applied to the study of CDR of CH_4 in a nanoscale reactor along with a nanomembrane and the authors report significant increases in syngas conversion (Smith and Lísal, 2004). Liu and Au (2001) investigated a La_2NiO_4-zeolite membrane for CDR of CH_4 and report significantly higher conversions of CH_4 and CO_2 than a fixed bed reactor. However, Lee et al. (2004) argue that at high pressures CDR is not a practical method for H_2 generation because at higher pressures the reverse WGS reaction consumes H_2 to produce H_2O:

Reverse WGS: $H_2 + CO_2 \leftrightarrow CO + H_2O$

Solar-thermal processes have been explored for CDR with and without the use of catalysts. Levy et al. (1993) used a solar-powered reactor utilizing a supported Rh catalyst, but even though high CH_4 conversions were obtained, coking was an issue when the gas flows were stopped. Dahl et al. (2001) have obtained high conversion of

CH_4 and CO_2 to syngas using a solar-thermal aerosol flow reactor (without catalysts) where carbon formation instead of being detrimental, aid the reaction by serving as radiation absorbers. Dahl et al. (2004) have investigated the solar-thermal aerosol flow reactor for different reaction temperatures, residence times and CH_4/CO_2 ratios. They also claim that the carbon black deposits from the reaction are not only beneficial and act as a catalyst, but could have potential economic value as a saleable product as well. Another novel method for CDR without using catalysts has been proposed by Zhou et al. (1998) where dielectric-barrier discharges were used to convert CH_4 and CO_2 to syngas at low temperature and ambient pressure.

Thermal decomposition of natural gas

The basic reaction for the direct thermal decomposition of methane (TDM) can be given as (ΔH values given at 298°K) (taken from Trimm and Önsan, 2001):

Direct decomposition: $CH_4 \rightarrow C + 2H_2$, $\Delta H = +74.8$ kJ/mol

One of the main reasons why TDM has been gaining popularity recently is the fact that as opposed to SMR where CO_2 is produced (and in some industrial cases released into the atmosphere), the only products of TDM are H_2 and solid carbon. In the absence of O_2 at temperatures greater than 700°C, CH_4 can be decomposed in the presence of a carbon catalyst to H_2 and solid C which deposits on the catalyst and this method has been claimed to result in a 50% or greater reduction of GHG (Dunker and Ortmann, 2006). For clean energy production using fossil fuels there is an urgent need to avoid GHG emissions. Even though the overall thermal efficiency of SMR is higher than TDM, the latter is claimed to be a better process because it not only obviates the need to sequester CO_2 emissions, it also produces a marketable

commodity, namely carbon black which has a market value and can, potentially be used as a future fuel when it might be permissible to burn carbon (Steinberg, 1999). Steinberg (1999) also lists a slew of other benefits of TDM including the fact that it is only as expensive as SMR without CO_2 sequestration (which, if included would certainly make TDM cheaper) and lays out the case for the need for future research and development of TDM. Steinberg (1994) has previously described the HYDROCARB process, developed in the Brookhaven National Laboratory to produce energy from the thermochemical cracking of coal co-processed with biomass with reduced CO_2 emissions. Steinberg (1998) further describes a novel process where TDM can produce H_2 (which is mentioned to have the least process energy requirements with no CO_2 emissions) which can then be used via the Carnol process to convert the CO_2 emissions from power plant stacks to produce methanol to be used as a vehicular fuel further reducing GHG emissions.

Carnol process: $CO_2 + 3H_2 \rightarrow CH_3OH + H_2O$

The production of H_2 via TDM has been achieved through a variety of pathways: thermal reactors with and without catalysts (carbon or metal catalysts), molten metal bath reactors, using plasma, and using solar radiation. Steinberg (1998) used a tubular reactor made of inconel high alloy steel without a catalyst to decompose CH_4 to H_2 and C and noted that the decomposed C adhered to the reactor wall. After several runs the C deposits plugged the tube and restricted gas flow, but Steinberg (1998) notes that the fine submicroscopic C particles tend to catalyze thermal decomposition. Muradov (1998) investigated TDM over Ni/alumina, Fe/alumina and carbon-based catalysts. It was reported that even though transition metal-based catalysts achieved TDM with very high initial H_2 concentration in the effluent gas stream, the deposition of C on the

surface of the catalysts drastically reduced their activity and the only way to rejuvenate the activity was to burn off the C as CO_2 (which essentially defeats the purpose of TDM as a CO_2 free process). On the other hand the use of carbon-based catalysts was found to be advantageous since there was no need for the separation of C from the catalysts. Muradov (1998) reported that activated C served as the best catalyst by providing a large surface area for the methane decomposition to occur on tests carried out on a multistage fixed bed reactor. Previous experiments using a variety of catalysts such as Co, Ni, Rh, Fe, Pd and Ru for TDM has been performed for TDM for H_2 production specifically for fuel cell applications and palladium was reported to be the best (Poirier and Sapundzhiev, 1997). But this study also relied on burning the C deposits as CO_2 emissions for catalyst regeneration. Dunker et al. (2006) investigated TDM on a quartz reactor with a fluidized bed of carbon black particles and report that even though this was a good configuration for H_2 production, the C deposited from CH_4 was less active as a catalyst than the initial carbon black. They hypothesize that when this C gets deposited onto the catalyst it could decrease the specific surface area of the catalyst by occupying the internal cavities, micropores and mesopores and thereby reduce H_2 production after an initial rapid increase.

Steinberg (1999) has reported the use of molten metal bath reactors using molten tin or copper through which CH_4 is bubbled. The heat (supplied by an independent tubular heat exchanger by burning CH_4) decomposes CH_4 and the advantage of such a system is that the C deposits on the liquid metal and can be separated by density difference by skimming off the surface. Another novel method for the catalytic pyrolysis of CH_4 utilizes the heat from the heavy metal liquid coolant (such as lead, lead-bismuth or tin) used in Generation IV nuclear reactors (Serban et al., 2003). The authors report that CH_4 conversion is dependent on contact time between CH_4 and the liquid media as well as the CH_4 bubble size and note that the

significant advantage of this process was the ease of removal of C from the media. The best liquid media was reported to be a bed of 4-in. Sn + SiC or 4-in. Sn.

The use of a plasma arc to supply the energy required for pyrolysis, especially the Kvaerner CB and H process to simultaneously produce H_2 and carbon black as marketable products has been described (Gaudernack and Lynum, 1998). The authors claim that this process had a lower production cost, higher efficiency, wider feedstock flexibility and higher process modularity (easier adaptability to plant size) than most conventional production methods. Cho et al. (2004) used a microwave plasma (2.45 GHz) using catalysts to decompose CH_4 and reported high conversion and yield of H_2 and carbon black with Pt loaded catalysts performing better than Pd based catalysts. Horng et al. (2007) discuss the various parameters to determine the optimal operating conditions for H_2 production using a plasma converter. High frequency pulsed plasma was generated by applying a pulsed voltage in an atmosphere of CH_4 to achieve decomposition into H_2 and carbon and the resulting H_2 gas was successfully stored in titanium plates (da Silva et al., 2006). The voltage pulses were instrumental in selecting the hydrogen species to the titanium plate (cathode).

Concentrated sunlight was used as the energy source to investigate TDM in a high-flux solar furnace and it was reported that for temperatures greater than 1900 K, the dissociation was not dependent on the residence time of CH_4 and that complete dissociation could be achieved for temperatures greater than 2100 K for reaction times as low as 0.2 S (Dahl et al., 2001). Hirsch et al. (2001) describe novel processes to combine TDM utilizing concentrated solar energy in solar chemical reactors with a cavity-receiver type configuration (efficient capture of incident solar radiation entering the aperture of a well insulated enclosure to achieve reaction temperatures of 1500 K). They propose that the carbon formed as a result of TDM either be steam-gasified in a solar gasifier to produce syngas which can then be converted to H_2, or be used as a

reducing agent of ZnO in a solar carbothermic process to yield Zn and CO that can further be converted to H_2 via the WGS reaction. Either of these options, according to the study achieved open cycle energy efficiencies greater than 65%. Hirsch and Steinfeld (2004a, 2004b) describe a continuous flow operation for the solar TDM using a vertex flow of CH_4 in a cavity-receiver filled with carbon particles that are both radiation absorbers as well as nucleation sites for the decomposition reaction. By using a graphite nozzle as the solar radiation absorber (energy being supplied by a solar furnace), TDM was performed in a lab scale reactor without any catalysts and conversion rates of 30-90% was reported (Abanades and Flamant, 2005). The major disadvantages of utilizing TDM as a biogas-to-H2 conversion route are the need for expensive catalysts, coke formation and unavailability of small-sized reactors suited for dairy applications.

From the different methods discussed above to convert biogas to H_2, SMR and water gas shift reactions followed by the use of a semi-permeable membrane for selectively removing product H_2 is recommended as the best choice. Of the many reasons listed and discussed above favoring this schema, the main advantage of this route is the availability in the market of small-size reactors that can be used in dairy operations where the volume of product H_2 available is in the range of 0.1 – 0.2 million scf per day. The other advantages of the proposed route are availability of relatively cheap reactors, good understanding in the market of the technology and maintenance issues for SMR, and lower operational and maintenance costs for the dairy producer. Hence all economic analysis presented will be based on the use of SMR as the preferred biogas-to-H_2 conversion route.

4 RESEARCH OBJECTIVES

The primary objectives of this dissertation are:

a) to investigate some options for biogas utilization in a CAFO other than production of CHP

b) to examine the potential of dairy manure to contribute towards a future hydrogen economy in NYS

In order to achieve the above objectives, to perform analyses with as much real information as possible and in order to demonstrate that this investigation can be applied in real situations so researchers and policymakers can benefit from it, the following sub-objectives were also considered:

- to get real data from the market place for equipment cost, performance and durability for the utilization options considered
- to assess the feasibility of producing H_2 on site on a real dairy farm in NYS
- to present a review of hydrogen production methods specifically using natural gas as feedstock to enable the reader to appreciate the diversity in thermal/thermochemical methods of hydrogen production
- to illustrate with the use of GIS the potential for cluster formation among CAFOs for effective and efficient management of manure for H_2 production
- to investigate a sample cluster as a test bed and include siting options for centralized anaerobic digestion
- to illustrate how GIS tools can be utilized to plan infrastructure development for a future hydrogen highway system in NYS

Even though it is well known theoretically that biogas can be utilized in a myriad of ways, one aim of this dissertation was to investigate some of the alternatives to typical CHP applications of biogas utilization in a CAFO, namely production of pipeline quality substitute natural gas and two pathways for production of H_2. In order to approach this in a realistic fashion, a related goal was to get actual data from the market place for equipment cost, performance and durability for all utilization options considered. At the same time, biogas utilization for CHP and for production of only heat (without electricity generation) has also been examined.

A second objective of this research was to examine the potential of dairy manure to contribute towards a future hydrogen economy in NYS, specifically how much H_2 could realistically be obtained from dairy manure derived biogas. Using this, an estimate is made of the potential for renewable dairy manure derived H_2 to contribute towards a future hydrogen energy economy in NYS.

It was also an objective to report on the feasibility of producing H_2 on site on a real dairy farm. This was facilitated by a grant from the USDA which helped set up a gas cleaning skid which is currently on site and capable of cleaning the gas to reformer acceptable standards. Since the reformer will not be installed at the farm (in the near future) due to unforeseeable circumstances, this objective will not be achieved soon.

There exist various methods of producing H_2 from biogas. Because it was one of my goals that this dissertation be used as a guide and a reference in the future to establish biogas to hydrogen production systems, one of my research objectives was to present a concise review of hydrogen production methods, specifically using natural gas as feedstock, and therefore assess and recommend the most feasible route for biogas to hydrogen conversion.

It was also my objective to illustrate with the use of GIS the potential for the formation of clusters of dairy farms in NYS, for effective and efficient management of

manure for H_2 production. A related aim was to then investigate a sample cluster as a test bed and include siting options for centralized anaerobic digestion. Finally, an illustration has been made of how GIS tools can be utilized to plan infrastructure development for a future hydrogen highway system with a network of CAFO clusters and suitably located hydrogen fuel stations across NYS.

5 DATA

Detailed geospatial coordinates for all the 633 CAFOs in NYS surveyed in this study were obtained from Ma (2006). NYS county outlines and census tracts information were obtained from the New York State GIS Clearinghouse through the Cornell University Geospatial Information Repository (http://cugir.mannlib.cornell.edu/). Detailed road maps were obtained from the Accident Location Information System (ALIS) project, a multi-agency project of the NYS government through the Cornell University library system. These maps were used to analyze road networks to yield distance covered and time required for transporting manure from various farms to a central location.

Original equipment manufacturers were contacted over 4 years to get information on price, technical specifications, operation and maintenance costs, lifetime etc. These data have been detailed in Appendix A.

Geospatial coordinate files for I-81 and the NYS Thruway were also obtained from the Cornell University library system. Spatial coordinates for proposed hydrogen fueling stations were obtained from Milbrandt (2006). Data from AA Dairy was generously provided by Mr. Bob Aman, owner of AA. Data for actual biogas production (Jan 2004 through May 2005), costs, benefits, electricity and heat savings due to the digester etc were obtained from the NYSERDA study on the five farms investigated (Gooch et al., 2007). Most cost data for the dairy farms analyzed are available online (courtesy of the manure management group at Cornell University) at http://www.manuremanagement.cornell.edu.

6 METHODOLOGY

6.1 An Economic Analysis of Biogas Utilization Options at Five Dairy Farms in the state of New York

Biogas can be converted to thermal or electrical energy on-site or sold to a user off-site. The process of choosing the right option for biogas utilization can be complex and should be an iterative process. For this, it is essential to understand the technological options available, the physical, chemical and combustion characteristics of the fuel, and the associated systems needed for transportation, clean-up, storage and compression.

The main applications of biogas considered for economic analysis in this dissertation can be summarized as:

1. Production of heat by combustion in a boiler
2. Generation of electricity using an engine/generator set or microturbines
3. Combined heat and power generation
4. Production of pipeline quality substitute natural gas, which can either be used as a compressed gas for vehicular fuel or can be injected in the existing natural gas pipeline
5. Production of ultra-pure hydrogen, which can be used for on farm power needs, or compressed and sold in the pipeline or as a high-purity gas for research and industrial uses

In this chapter, five dairy farms located in upstate New York have been examined and some options for biogas utilization explored. An economic analysis of four options for the end use of biogas namely electricity and/or heat, pipeline quality gas and hydrogen (with and without CO_2 removal) is provided. Currently, all farms utilize biogas for production of electricity and/or heat.

The five farms analyzed serve as good representatives for the types of farms typically found across NYS. These five farms, AA Dairy (AA) in Candor, New Hope View Farm (NHV) in Homer, J.J., Farber Farm (FA) in East Jewett, Ridgeline Farms (RL) in Clymer, and Noblehurst Farms, Inc. (NH) in Linwood, participated in an anaerobic digestion monitoring study sponsored by the New York State Energy Research and Development Authority (NYSERDA) with Cornell University as research contractor. Much of the data on these five farms have been taken from Gooch et al. (2007), which is an interim report on the status of the digesters at these farms (key data available from Jan 2004 through May 2005). The number of cows on the farms range from 108 to 1404. Annual biogas production at these farms ranged from 0.48 million ft^3/yr to 48 million ft^3/yr. It should be noted that Farber Farm closed down their dairy business in the fall of 2006, but data and analysis of this farm has been included in this dissertation for purposes of comparison since there are many farms in NY with cow populations similar to Farber's.

For each of the options analyzed, all costs associated with relevant current farm practices were taken into consideration. This included the costs incurred for construction of digester as well as the current end use (such as engine generator or boiler). This made it easier to compare across the farms and can easily be adapted for similar farms which currently don't have a digester. For each farm, net present worth of producing a unit of product (five utilization options) has been determined. Consultations were made with experts and practitioners in the field for specific biogas applications and the problems associated with the process. All economic analyses make use of current market prices of all necessary equipment custom made to suit farm-specific and project-specific needs. The net present worth calculations make it easy to compare on-farm production cost of a product with the current market value to make a choice for utilizing the biogas.

Background of Dairy Farms Investigated

AA Dairy

AA Dairy, located at Candor, NY, a 500-550 cow dairy had its plug flow anaerobic digester commissioned in 1998. It was designed to handle manure from as many as 1000 cows to accommodate for future expansion of operations. A schematic of the AD system at AA Dairy is shown in Figure 14. There is an H_2S scrubbing system (activated carbon-based) which is currently not in use but has been tested at AA as part of a project to study the feasibility of producing H_2 by steam reforming biogas on-site.

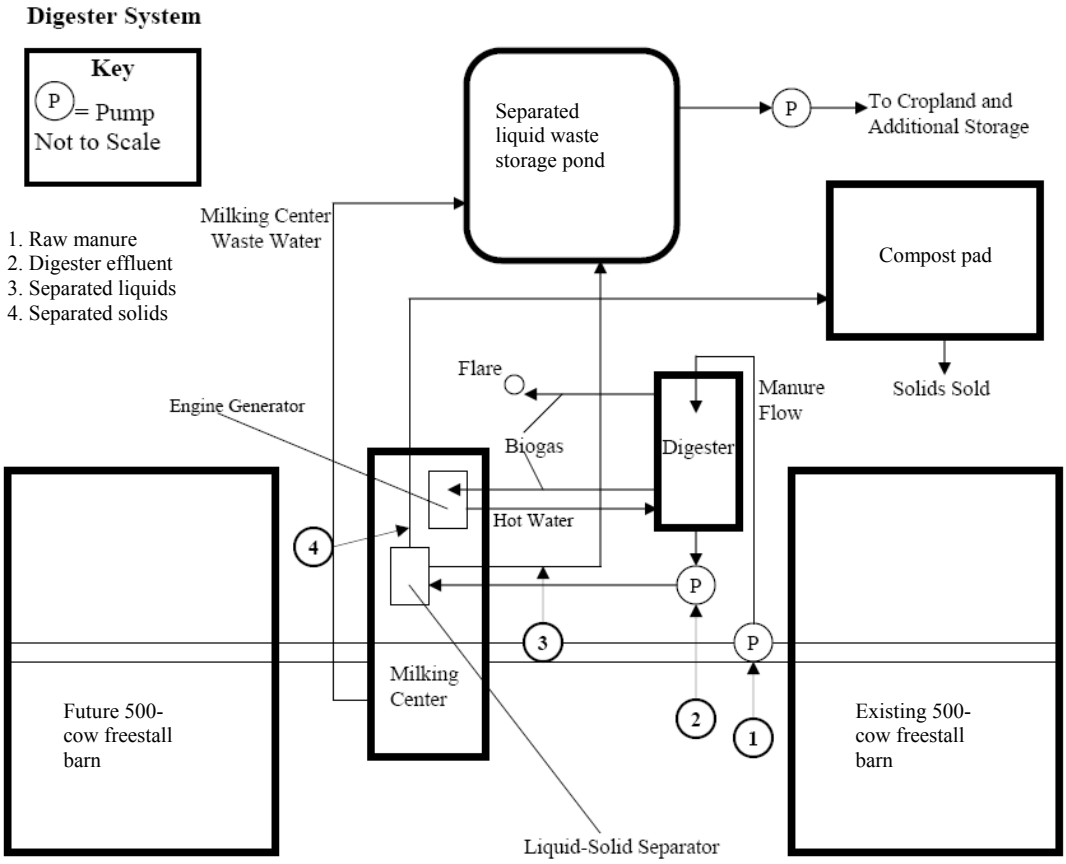

Figure 14. Schematic of operations at AA (Source: Wright and Graf, 2003a)

New Hope View Farm

New Hope View Farm (NHV), previously known as DDI is an 850-cow operation located in Homer, NY. The primary reason for installing the anaerobic digester was to control odors. Biogas is cleaned using a H_2S scrubber (wood chips impregnated with iron oxide) before being combusted in a 70 kW Ingersoll-Rand microturbine to produce electricity (Pronto and Gooch, 2007). Some biogas is also used to fuel a boiler to produce heat to warm the barn floors as well as to maintain the temperature of the digester. A schematic of the system at NHV is shown in Figure 15. Solids are separated by the separator at NHV and used either as bedding for cows or sold as compost.

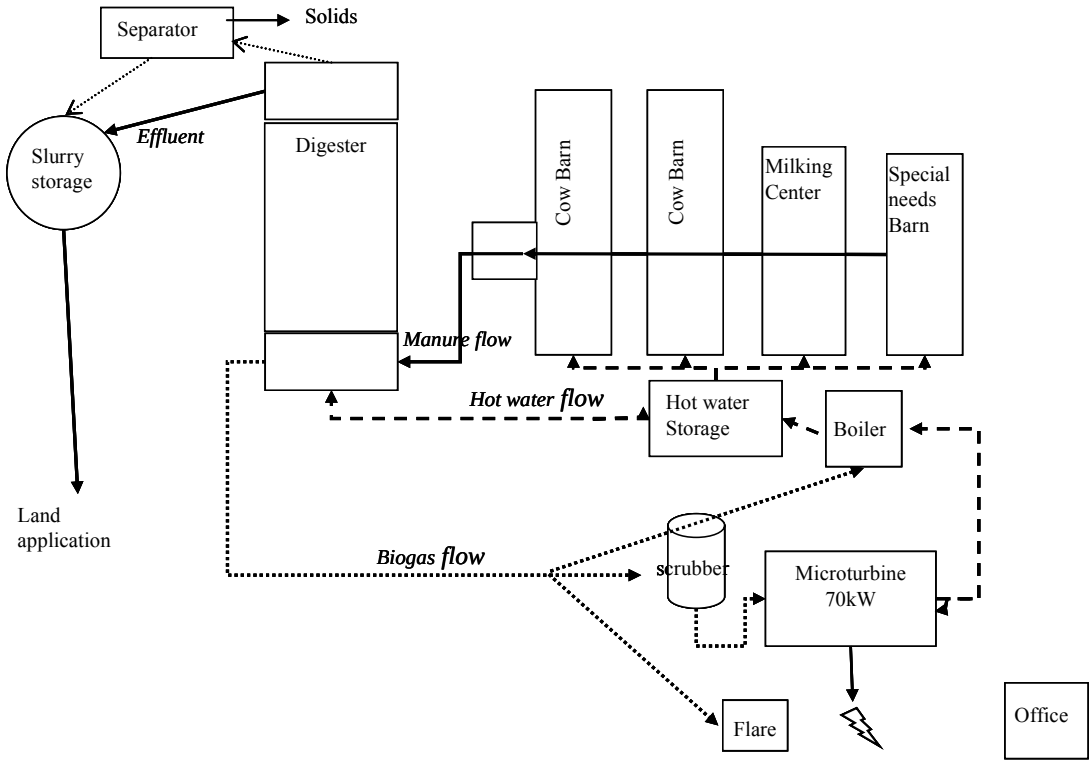

Figure 15. Schematic of operations at New Hope View Farm (Source: Wright and Graf, 2003b)

JJ Farber Dairy

Farber Dairy (FA) located in East Jewett is a closed herd of about 100 cows. Located in a recreational area in the Catskill Mountains, the primary reason for installing the digester was odor control (Wright and Ma, 2003a). A unique aspect that differentiates FA from the other farms studied is that they use a fixed film digester that utilizes only separated liquids from the manure slurry. Solids are used for spreading, as bedding material and also sold as compost for up to $10/cu yd. A schematic of the system at FA is shown in Figure 16. Farber's overall digester economics might not seem too promising because of current overall low biogas production per cow per day (around 25 ft^3/cow-d). If solids were not separated and digested, and by assuming biogas production of 100 ft^3 per cow per day, it is concluded that additional investments to generate electricity would be the best future option. The low biogas production rate does not warrant investment in hydrogen energy systems.

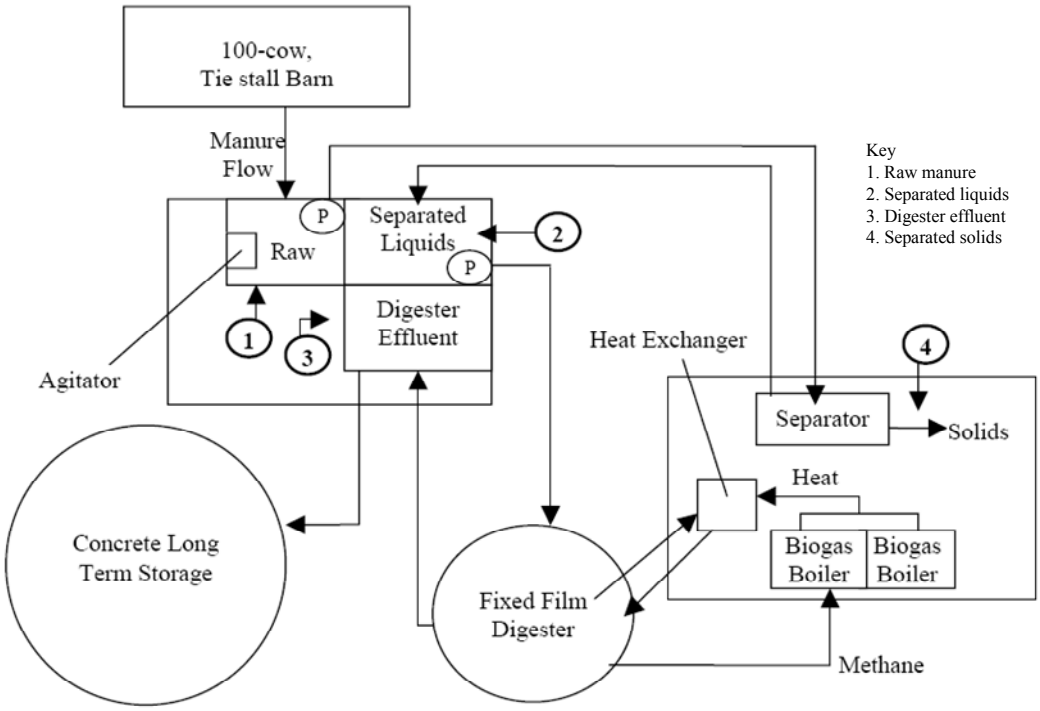

Figure 16. Schematic of operations at Farber Dairy (Source: Wright and Ma, 2003a)

Ridgeline Farm

Ridgeline Farm (RL), previously known as Matlink Dairy is a 525-cow operation located in Clymer, NY. The farm chose to install an anaerobic digester to address issues of odor control, nutrient management and energy production (Pronto and Gooch, 2008). Support for the digester project came from NYSERDA in 2001. A schematic of the system at RL is shown in Figure 17. In addition to manure the digester is also loaded with other organics which include processing residues from an ice cream plant, salad dressing, fryer grease and other food processing waste. This has increased biogas production to a large extent. This farm can serve as a model for future digester projects in NYS to combine food (and other processing) residuals with manure for increased biogas production.

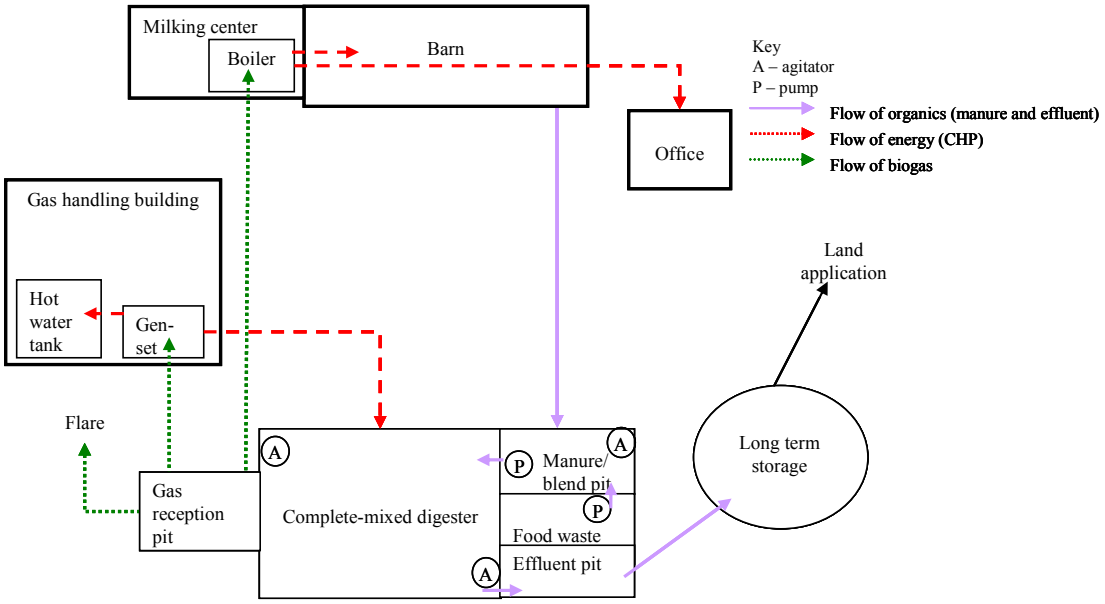

Figure 17. Schematic of operations at Ridgeline Farm (adapted from Pronto and Gooch, 2008)

Noblehurst Farms

Noblehurst Farms is an 1100-cow operation located in Livingston County, NY. Environmental concerns (water contamination) were the primary reasons for installing the digester (Wright and Ma, 2003b). In the past, manure was spread directly on land that is part of two watersheds provideng drinking water to neighboring communities. The digester helped address possible water contamination problems and complaints about odor. A schematic of the system at Noblehurst is shown in Figure 18. The farm initially considered being part of a centralized digester system but high transportation cost considerations forced them to choose an on-farm digester.

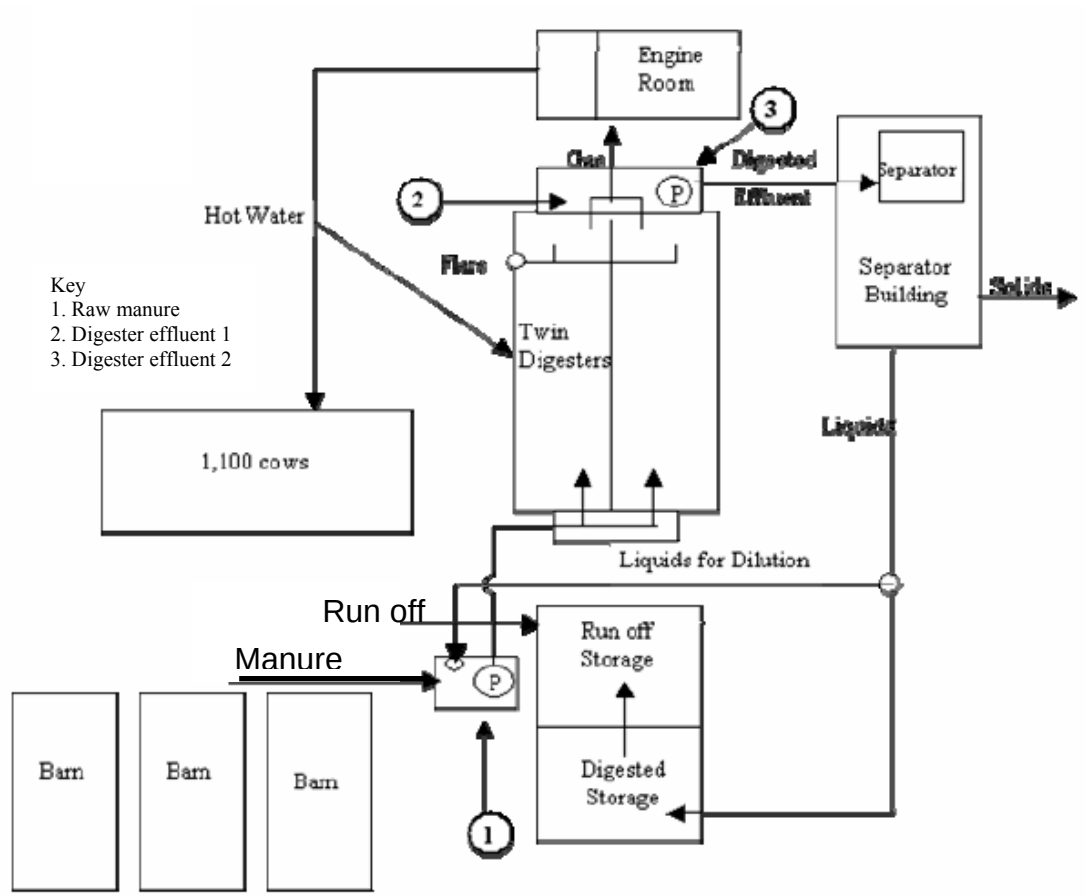

Figure 18. Schematic of operations at Noblehurst Farms (Source: Wright and Ma, 2003b)

Average monthly herd sizes are provided in Table 18 and a summary of characteristics of all five farms is provided in Table 19 in Appendix D.

Biogas utilization and resource recovery

There are a number of ways to exploit the energy content of the methane in biogas. The direct combustion of biogas in a boiler to produce hot water or steam is the most efficient in terms of energy. Electricity production, typically using an IC engine-generator set is the most widely followed application in the US. Some producers (like AA Dairy) have modified diesel engines to combust biogas but there are manufacturers that supply IC engines to handle biogas directly. Biogas can also be 'cleaned' and 'upgraded' by scrubbing out the hydrogen sulfide and removing carbon dioxide, moisture and particulates to yield a higher calorific value gas. This upgraded gas can in turn be compressed and blended with natural gas in the pipeline, or catalytically reformed under high pressure and temperature to produce high-purity hydrogen. The production of hydrogen from renewable resources has attracted a lot of attention in recent years. Though most of the electricity produced can be used on-site, as is the case at AA Dairy, there is not much need for comfort heating (from hot water or steam) on a dairy farm and practicalities of transferring the thermal energy outside of the farm must be made on a case by case basis. Upgraded gas, on the other hand, can be compressed and sold commercially in the market. The process of choosing the right option for biogas utilization can be complex and should be an iterative process. For this, it is essential to understand the technological options available, the physical, chemical and combustion characteristics of the fuel, and the associated systems needed for transportation, clean-up, storage, and compression. These four applications of biogas are summarized in Figure 19.

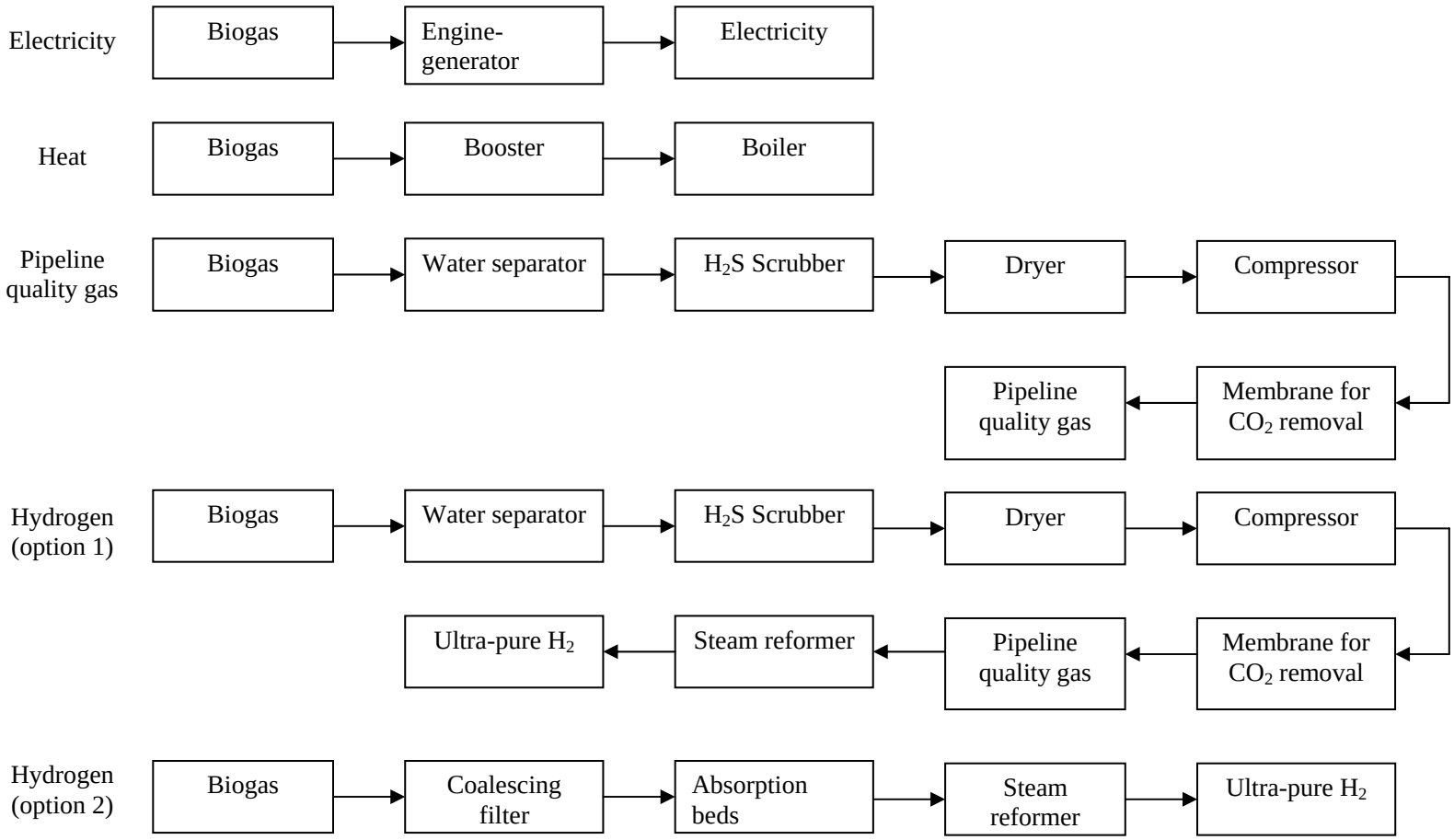

Figure 19. Summary of biogas options considered

Economic analysis of biogas utilization options

All farms except FA currently utilize biogas for production of electricity and/or heat. FA uses its biogas only to produce heat. An economic analysis was performed for each of the utilization options mentioned above for all five farms. Costs for all equipment were obtained from original equipment manufacturers in the industry (see Appendix A for details). A discount rate of 10% was assumed for all evaluations and inflation was not taken into consideration. Based on the life of equipment and its capital cost, a levelized annual cost (LAC) was calculated using the discount rate. It is calculated by estimating the annual payment that would be required to pay off a loan (Chapman, 2000). If dairy producers were to make an initial investment, the LAC is the amount, if paid regularly throughout the project lifetime would pay off a loan taken for the investment. The concept of LAC is akin to present worth analysis and makes comparison of different options, each with a different set of components, easier and more meaningful. It represents the yearly value of foregone opportunities which would have existed were the investment not been made. A brief description of each of these utilization options is provided here.

Production of heat (using a boiler)

Though production of heat is the best option for biogas utilization, the amount of heat available through the combustion of biogas from large CAFOs will typically exceed on-farm requirements. While some European countries such as Denmark have managed to utilize the calorific value of biogas for space heating of residences in communities situated close to the biogas production facility, this has not been a popular option in the US.

One of the main issues with using a boiler to combust biogas for heat production is the presence of H_2S in the biogas which can react with condensate in the boiler to form sulfuric acid, which is highly corrosive and can damage boiler

components. Condensation typically occurs when the temperature in the boiler drops below 180 °F. This can happen due to a variety of reasons including low or no biogas pressure (due to low biogas production). When condensation occurs, the H_2S in the biogas can form sulfuric acid and corrode boiler components. This can be addressed in one of many ways. The basic choice is between opting for a regular boiler with no additional controls (less costly but with shorter life and lower system reliability) and investing in additional equipment (expensive but with extended life and more system reliability) to avoid condensation.

Typically producers choose not to incur additional costs and replace corroded components as they fail. This can cause undesirable reliability issues in the heating supply. An additional compressor to pressurize the input biogas can maintain constant temperature but compressors with the ability to handle biogas with special seals can cost much more (around $60,000; see Appendix A for equipment manufacturer recommendation) than the basic boiler set up. Dual-firing boilers are available in the market with the ability to burn a supplementary fuel such as natural gas or propane when the primary fuel (biogas in this case) is not available. Temperature sensors and additional controls in the boiler system can thus enable producers to automatically switch between fuels when necessary to prevent temperature drop and subsequent condensation. A variation of the latter option is to have dual-fired boilers which simultaneously use both fuels in separate flames but utilize only the primary fuel once a desired temperature is attained. Dual firing boilers typically cost about $50,000 and $60,000 for the complete system.

Of the five farms examined, Farber Farm was the only one without an electricity generation system on the farm. Though they had been using a boiler for most of their on-farm heat needs, the overall low biogas production had not yielded significant returns on investment in a boiler (even though boiler costs indicated were

quite low). On the other hand, DDI has had experience for over 3 years using biogas only for the production of heat (before the microturbines that are currently used for power generation were commissioned) using a boiler (Jones, 2008). At DDI, an initial investment of about $22,000 for a regular single-firing boiler was made to utilize biogas for on-farm heating needs. Jones (2008) noted that DDI had problems with temperature drops and subsequent condensation which caused acid to form and corroded some of the boiler parts, which subsequently failed and had to be replaced. This led to maintenance charges of about $7,000 after about 4 years of operation. The boiler life was estimated at 10 years.

In the economic analysis that is presented, we have considered both options for biogas utilization for heat production using a boiler: low initial investment for a simple boiler accompanied by frequent maintenance vis-à-vis high initial investment for either a dual-firing boiler or a biogas booster with special seals (both of which are assumed to be in the order of $50,000 – $60,000. The differences between the net present worth for both options of a unit of heat capable of being produced by combusting all biogas available on the farm for an assumption of daily biogas production of 80 ft^3 cow^{-1} d^{-1} on all farms is negligible. It is concluded that it would be a better idea for farmers to opt for the higher investment utilizing a dual-fired boiler in case the option of heat generation is utilized. It should be noted however, that for all farms examined, the amount of heat available is far higher than on-farm needs and unless a market is available this option might not be the best economic choice.

An assumption of a total annual operation and maintenance (AOM) cost of $10000 – $12000 for the option of combusting all biogas for heat production, which includes AOM costs of operating the digester as well, has been made. Because biogas is not used for electricity generation, the cost calculations include the farm expenditure on electricity by assuming a purchase price of 9 cents per kWh for electricity. The

chapter on sensitivity analysis takes into account variability in electricity purchase price. Detailed economic analysis of combusting all biogas in each of the farms examined is shown in Appendix E and also shown in Table 5.

It should be noted that some of the calorific value of the produced biogas is typically used to keep the digester at its operating temperature of around 100 deg F and some heat is lost from the digester walls and floor. Minott and Scott (2001) estimate (for AA Dairy) that approximately 43% of the calorific value of biogas (assuming 55% methane content and assuming 1000 Btu/scf as the Lower Heating Value of methane) is used to maintain the digester at an operating temperature of around 100 deg F. But it should be noted that heat requirements to maintain digester temperature will vary according to season.

Generation of pipeline quality gas (substitute natural gas)

Biogas needs to be cleaned and upgraded before it can meet specific standards for possible injection into the natural gas pipeline. The methane content of natural gas is between 90-95% and in order to upgrade biogas, we need to remove most of the CO_2 and H_2S.

In this scenario, biogas is initially passed through a separator to remove liquid water droplets and then scrubbed of most of its hydrogen sulfide content. The scrubbed biogas is then passed through a dryer to reduce its moisture content down to levels acceptable downstream at the membrane. It is then compressed to around 200 psi and passed through a membrane which selectively removes most of the carbon dioxide. The outlet from the membrane is essentially methane and can be considered pipeline quality gas and substituted for natural gas. Detailed contact information on equipment suppliers and contact personnel are given in Appendix A. Since biogas is not used for electricity generation, the cost calculations include the farm expenditure on electricity. It will also be assumed that some of the heat required to maintain the

digester at its operating temperature of 100 deg F as well as the heat required to maintain the membrane at its operating temperature of 150 deg F will be provided by utilizing the waste heat from the compressor. The remainder of the digester heating needs will have to come either by combusting some of the product upgraded gas and utilizing a heat exchanger, or by purchasing either heating oil or propane, whichever is cheaper. There will be additional electricity costs to run the compressor constantly (rated at 18 BHP) which have been accounted for in the economic analysis.

In the economic analysis it is also pertinent to consider additional costs that will almost certainly be incurred to transport the processed dairy-derived substitute natural gas to be injected into the closest existing natural gas pipeline. Saikkonen (2006) has addressed aspects of biogas processing, transport and injection to the pipeline in detail. According to Parker (2004), total pipeline costs can be itemized into material costs (26% of total construction costs), labor (45% of total construction costs), right of way (22% of total construction costs) and miscellaneous costs (7% of total construction costs). Saikkonen (2006) estimates that for a 500-1000 cow operation the diameter of lateral pipeline required would be 0.66 inches for a steel pipeline 0.25 miles long and for piping lengths of 0.5 miles and 1 mile, the required pipe diameters have been calculated to be 0.75 and 0.88 inches respectively. According to Saikkonen (2006), total costs for pipeline construction and installation for a 1" diameter Carbon steel pipe would be $26 per linear foot. With the assumption that all farms will, at the very least, require one mile of pipeline for processed biogas to be transported to the nearest natural gas pipeline, this cost of $26 per linear foot will be used for economic analysis and this assumption will require a pipeline of 0.88" diameter. Details of these costs for economic analysis performed for all farms can be found in Appendix E. Saikkonen (2006) also estimates that for 1 mile of pipeline of 1" diameter, the overall cost of pipeline material and installation as well as additional

costs associated with fittings and valves (estimated at 50% of pipeline material and installation costs) will be approximately $205,920. Additional costs for excavation to the tune of $49,280 (for 1 mile of pipeline using a 20 ft^3 hydraulic backhoe for a trench depth of 6' to 10') and for backfilling the trench for approximately $8,848 (for a trench depth of 6' to 10' using a 27 ft^3 front end loader with the backfill material being hauled less than 100') have also been considered, again following recommendations from Saikkonen (2006).

Production of H_2 (with CO_2 removal)

The production of hydrogen takes the same route as substitute natural gas, the only difference being that after the membrane stage, the high methane content gas stream is passed through a steam reformer which produces ultra-pure hydrogen at high pressure and temperature. Detailed contact information on equipment suppliers and contact personnel are given in Appendix A. The suppliers quoted most of the equipment costs and indicated the lifespan and operational and maintenance costs as well. It will be assumed that the heat required to maintain the digester at its operating temperature of 100 deg F as well as the heat required to maintain the membrane at its operating temperature of 150 deg F will be provided by utilizing the waste heat from the compressor and/or the steam reformer. There will be additional electricity costs to run the compressor constantly (rated at 18 BHP).

Production of H_2 (without CO_2 removal)

This option has been covered in detail in Section 6.3 of this chapter. In this route, after cleanup of the biogas in a Gas Processing Unit (removal of water droplets, particulates and H_2S), the CO_2 + CH_4 mixture is directly sent as input to the steam reformer where in spite of lower efficiencies, ultra-pure H_2 can be produced in sizeable quantities to merit investment in this route. The uniqueness of this set up is that in addition to the base hydrogen plant, there is a high temperature shift reactor and

a membrane reactor which result in yields of H_2 higher than the process described above (with CO_2 removal).

Considerations for performing economic analyses

In the Business as Usual (BAU) scenario, the net present worth of current biogas utilization options adopted on farm are calculated and compared across farms by using actual data for all farms for all major digester and biogas utilization project costs incurred to date. Data for actual biogas production (Jan 2004 through May 2005), costs, benefits, electricity and heat savings due to the digester etc were obtained from the NYSERDA study on the five farms investigated (Gooch et al., 2007). Other scenarios are also considered including assuming a higher biogas potential per cow per day on all farms and are discussed in detail in the section on sensitivity analysis. Since Ridgeline is currently the only farm (among the ones examined) co-digesting animal manure and food residuals. For all analyses for Ridgeline we have also examined a hypothetical option where there is no access to food residuals. These options will illustrate the net present worth of utilization options at farms similar to Ridgeline but without access to food waste. For illustrative purposes, only the BAU analysis for AA Dairy is shown here. Details of all other scenarios can be found in Appendix E.

BAU – Generation of Electricity at AA Dairy

This option is the one that is currently in operation. An energy audit for the farm was performed between October 1999 and September 2000 and a summary is given in Table 2 (Ludington, 2001):

Table 2. Estimated electricity use at AA Dairy (Oct 1999 – Sept 2000)

Equipment	**KWh**	**% of total**
Ventilation fan (free stall barn and other fans)	150,813	36.44
Vacuum pump	83,220	20.11
Refrigeration	54,355	13.13

Table 2. (Continued)

Lighting	75,586	18.26
Air compressor	21,462	5.19
Manure handling	14,529	3.51
Water pump	6,439	1.56
Milk pump	2,862	0.69
Milk pump	179	0.04
Miscellaneous/unaccounted	4,424	1.07
Total	**413,869**	**100**

Individual equipment costs were obtained from Wright and Perschke (1998) and are summarized in Table 3.

Table 3. Cost of AD system at AA Dairy (Wright and Perschke, 1998)

Component	**$**
Digester	
- manure pump	9,000
- engineering design	20,000
- concrete digester (including floating insulation, gas containing cover, 2 hot water heating circuits)	160,000
Subtotal	***189,000***
Energy conversion	
- Engine generator (used) and switching equipment	15,000
- Engine rebuilding	2,000
- Generator rebuilding	9,000
- Plumbing, electrical and mechanical systems	9,000
- Cable to utility hook-up	8,000
- Electrical engineering consultant	18,000
Subtotal	***61,000***
Solids separation	
effluent pump (7.5 Hp) variable speed drive	3,000
separation equipment	25,000
bldg for sep equipment	25,000
Subtotal	***53,000***
Total	**303,000**

The cost of producing electricity at AA is calculated by taking into consideration all costs incurred for the digester as well for gas utilization and related equipment. Based on the lifespan of each equipment, a levelized cost factor (LCF) was calculated by assuming a discount rate of 10%. This was used to then calculate a Levelized Annual Cost (LAC) as shown below:

LCF = $\frac{r(1+r)^n}{(1+r)^n - 1}$; where r is the discount rate (or lost opportunity cost), so if a piece of equipment has a life of 10 years, its Levelized Cost Factor, LCF can be calculated as:

LCF = $\frac{0.1(1+0.1)^{10}}{(1+0.1)^{10}-1} = 0.1627$

LAC = Levelized Cost Factor (LCF) * Capital Cost

Total Project Cost (TC) = Levelized Annual Cost (LAC) + AOM - Benefits

Life spans of equipment are assumed and shown in Table 4. A discount rate (r) of 10% is assumed.

Table 4. Cost of producing electricity at AA Dairy: BAU scenario

Component				
Digester	**Cost ($)**	**Life (y)**	**LCF**	**LAC ($)**
Manure pump	9,000	5	0.2639	2,374
Engineering design	20,000	10	0.1627	3,255
Concrete digester (including floating insulation, gas containing cover, 2 hot water heating circuits)	160,000	10	0.1627	26,039
Subtotal	**189,000**			**31,668**
Solids separation				
Effluent pump (7.5 Hp) variable speed drive	3,000	5	0.2639	791
Separation equipment	25,000	10	0.1627	4,069
Building for separation equipment	25,000	10	0.1627	4,069
Subtotal	**53,000**			**8,929**
Total Digester capital costs	**242,000**			**40,597**
Energy conversion				
Engine generator (used) and switching equipment	15,000	10	0.1627	2,441

Table 4. (Continued)

Engine rebuilding	2,000	10	0.1627	325
Generator rebuilding	9,000	10	0.1627	1,465
Plumbing, electrical and mechanical systems	9,000	10	0.1627	1,465
Utility hook-up system	8,000	10	0.1627	1,302
Electrical engineering consultant	18,000	10	0.1627	2,929
Subtotal	**61,000**			**9,927**
Total	**303,000**			**50,524**

Annual operational and maintenance cost (AOM) = $12,000

Total LAC = $50,524/y

Revenue (benefits) from compost sales = (1825 yd^3/y) * ($8/ yd^3) = $14,600/y

TC = $50,524/y + $12,000/y – $14,600/y = $47,924/y

Electrical Energy Produced: 70 kW = 551,880 kWh/y (assuming run time of 90%)

Cost of electricity production = $47,924/551,880 kWh = 8.68 cents /kWh

It can be argued that compost sales are not necessarily a part of digester operation but in this dissertation, the system under investigation is the entire manure management system which typically includes solid separation equipment. Because investment is made for these systems to produce compost and/or animal bedding and because sales of separated solids provide additional revenue for the producer, the costs and benefits from use of solid separation equipment have been included in the economic analysis. Using the same principles of calculating the levelized annual costs, the other farms were examined in detail to determine the costs incurred for

current biogas utilization. The BAU scenario gives us a quick idea of the amount that has already been spent (immaterial of where the funds were procured) to obtain a certain unit of energy. After analyzing the current conditions on all farms, other options for biogas utilization have been explored on all farms namely: generation of only hot water (for heating purposes), production of pipeline quality gas, production of ultra-pure H_2, with and without removal of CO_2. All analyses aim to provide the net present worth of a unit of energy for the amount of investment considered (again immaterial of how the investment might be realized). These calculations are summarized in Appendix E.

In Table 5, the cost of the major components of the financial model developed has been listed. Even though solids separation doesn't directly account for biogas production, it was included as a systems cost (benefits from compost are also taken into consideration in the analysis). Economic data for all five farms in terms of investment made for biogas utilization is available. Using data for all five farms for digester and biogas utilization costs, net present worth of electricity and heat utilization is first estimated. This is calculated on each farm as total project money spent divided by net product benefits accrued. For AA and DDI, we assume 70 kW power generation; for RL and NH, we assume a power generation potential of 130 kW (with equipment runtime of 90%). Actual power production on all farms (except RL) doesn't differ much from the assumed values. Additional capital required for gas utilization is assumed based on actual equipment available in the market. Due to economies of scale AA, NHV and FA each require the same additional capital costs to upgrade the gas. The additional cost of the high temperature shift and the water gas shift reactors for hydrogen production without CO_2 removal results in greater yields of hydrogen and hence makes the option economically the most suitable one. For production of substitute natural gas and hydrogen as biogas utilization options, the

economic analysis takes into account costs for on-farm electricity needs as well as power required for operating additional equipment such as compressors.

Annual operation and maintenance costs are assumed to be the same at each farm (but different for each utilization option) since it is difficult to isolate the AOM costs for just the biogas utilization option considered from general farm and digester related AOM costs. Based on data available for net biogas production at each farm, a reliable estimate of net substitute natural gas or net hydrogen potential on each farm has been made by utilizing data for conversion efficiencies provided by manufacturers or those available in literature. Total costs (including digester and gas upgrading) divided by net product yield on an annual basis gives us the net present worth of the product, expressed as cents/kWh for electricity, $/MM Btu for heat and natural gas production, and $/kg for hydrogen production. By comparing the cost of the product with the fossil fuel based alternative available in the market, this analysis provides an easy basis to make choices while considering options to manage dairy waste. Needless to say, some of the options proposed have the potential to generate sizeable revenues for the CAFO producers as well. The results mentioned in Table 5 assume biogas production of 80 ft^3 day^{-1} cow^{-1}. Sensitivity analysis (Section 7.1) has been performed and the robustness of the financial model tested by varying the biogas production from 40 ft^3 day^{-1} cow^{-1} through 100 ft^3 day^{-1} cow^{-1}. Average values of herd size for each farm based on data collected from Jan 2004 through May 2005 has been used. A summary of all these utilization options investigated for all five farms along with the major costs involved are shown in Table 5.

For the BAU scenario, we have determined the net present worth of utilization on each farm for a unit of electricity or heat or both. For the option of production of only heat, we have considered two options. In the high investment option additional investment is proposed, either for cleaning the biogas to remove H_2S or providing for

biogas boosters to pressurize the input biogas to control temperature in the boiler or for the purchase of a dual-fired boiler (to provide an alternative fuel to the boiler for heat production when biogas supplies are low, thereby increasing system reliability). In the low investment option, no such additional investment is considered, but this will most likely mean boiler parts will corrode and need replacement more frequently. Detailed discussions were had with consultants and practitioners in the field regarding specific issues with biogas boilers and the benefits of investing in the dual-fired boilers. We also consider two options for upgrading to pipeline quality substitute natural gas, with and without pipeline costs. Details of pipeline project costs including excavation and installation etc have been provided. The economic analyses for hydrogen production examine two options: with and without the separation of CO_2. With economies of scale and advances in membrane technology as well as development of small to medium size reformers, clusters of dairy farms have the potential to produce ultrapure hydrogen at rates competitive or even less than fossil fuel based hydrogen.

These various options are meant to serve as a guide for policymakers and/or CAFO operators to use while planning manure management and resource utilization. It is important to note that this approach should be specific to each farm or cluster of farms and each case will pose its own challenges and have its own unique solution. Even though the use of GIS has been made to discuss transportation logistics for trucking manure to a centralized location for community digestion and processing, transportation costs have not been included in the economic analyses. This is beyond the scope of this study, the inclusion of which will add more insight for planning.

Table 5. Detailed Summary of Biogas Utilization Options for all Five Farms

	AA	**NHV**	**FA**	**RL**	**NH**
Digester	189,000	350,000	51,000	337,000	310,000
Solids separation	53,000	89,000	48,000	61,689	61,000
Others	NA	43,800	27,000	56,900	14,200
Total Digester Capital Cost	242,000	482,800	126,000	455,589	385,200
Net levelized total annual costs	40,597	78,573	19,788	74,145	62,690
Benefits	14,600	12,000	5,000	24,000	11,680
Levelized Annual digester capital cost ($/y)	25,997	66,573	14,788	50,145	51,010
BAU: Current situation	**AA**	**NHV**	**FA**	**RL**	**NH**
Energy conversion: Capital investment ($)	61,000	186,000	61,000	178,931	302,500
Levelized cost of additional capital ($/y)	9,927	24,454	9,927	27,557	49,230
AOM	12,000	12,000	10,000	12,000	12,000
Net annual project cost ($/y)	47,924	103,028	34,716	89,702	112,240
Power potential (kW)	70	70	6	130	130
Current electricity production (kWh/y)	551,880	551,880	51,273	1,115,634	635,062
Current cost of producing electricity (cents/kWh)	8.68	15.20	67.71	7.28	14.75
Available thermal energy (MM Btu/y) (assumed)	7,680	13,967	1,568	23,962	20,385
Cost of producing heat ($/MM Btu)	10.85[a] 9.84[b]	6.37[a] 6.14[b]	NA 14.07[b]	3.03[a] 2.89[b]	3.61[a] 3.44[b]
Future options					
Pipeline quality gas production	**AA**	**NHV**	**FA**	**RL**	**NH**
Additional $ for gas quality enhancement ($)	197,400	197,400	197,400	324,800	204,600
Levelized cost of additional capital ($/y)	53,211	53,211	53,211	109,646	56,726
Electricity costs (farm and compressor) ($/y)	47,821	73,510	9,000	51,572	76,572
AOM	15,000	15,000	15,000	15,000	15,000
Annual project cost ($/y)	142,029	208,295	91,999	226,363	199,308
Pipeline quality gas potential (MM scf/y)	5.75	3.72	0.22	22.17	8.13

Table 5. (Continued)

Potential gas calorific value (MM Btu/y)	5,751	3,718	224	22,172	8,131
Cost of producing pipeline quality gas ($/ MM Btu)	24.70 30.73[c]	56.02 65.36[c]	459 612[c]	10.21 11.77[c]	24.51 28.78[c]
H_2 production (with CO_2 removal)	**AA**	**NHV**	**FA**	**RL**	**NH**
Additional $ for gas quality enhancement ($)	482,400	482,400	482,400	482,400	494,600
Levelized cost of additional capital ($/y)	90,611	90,611	90,611	147,633	94,713
Electricity costs (farm and compressor) ($/y)	47,821	73,510	19,572	51,572	76,572
AOM	18,000	18,000	18,000	18,000	18,000
Annual project cost ($/y)	182,429	248,695	142,972	267,351	240,295
H_2 potential (kg/y)	18,113	11,711	704	68,942	25,613
Cost of producing H_2 ($/kg)	10.07	21.24	203.01	3.88	9.38
H_2 production (without CO_2 removal)	**AA**	**NHV**	**FA**	**RL**	**NH**
Additional $ for gas quality enhancement ($)	700,000	700,000	700,000	700,000	995,000
Levelized cost of additional capital ($/y)	113,922	113,922	113,922	161,932	161,932
Electricity costs (farm and compressor) ($/y)	47,821	73,510	19,572	51,572	76,572
AOM	18,000	18,000	18,000	18,000	18,000
Annual project cost ($/y)	205,739	272,006	166,282	281,649	307,514
H_2 potential (kg/y)	38,004	24,571	1,478	144,648	53,738
Cost of producing H_2 ($/kg)	5.41	11.07	112.53	1.95	5.72

a: Cost of heat production assuming biogas production of 80 ft^3 cow^{-1} d^{-1}, all biogas combusted to produce heat (high initial investment)
b: Cost of heat production assuming biogas production of 80 ft^3 cow^{-1} d^{-1}, all biogas combusted to produce heat (low initial investment)
c: Cost of producing pipeline quality gas including pipeline, excavation and backfilling costs

6.2 Study of the Potential of Dairy Farms to Supply Renewable Hydrogen in the State of New York

Data for 633 medium and large animal operations in NYS were originally acquired by Ma (2006) (Appendix J). Using this data the maximum possible achievable hydrogen (were all animal manure in all operations to be converted to hydrogen via biogas production through anaerobic digestion) is calculated. This section especially deals with the study of the potential of dairy farms to supply renewably produced hydrogen in NYS. The following scheme (Figure 20) is utilized to estimate the hydrogen potential of these 633 animal operations in NYS:

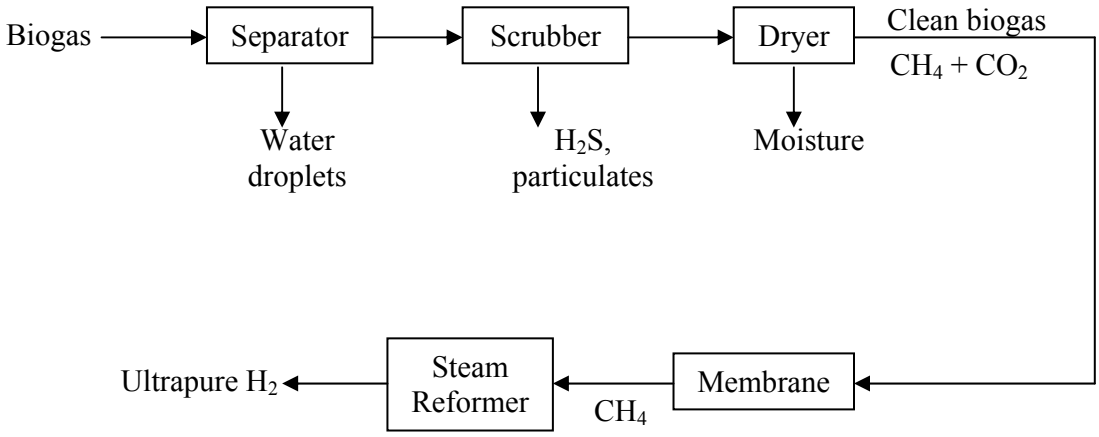

Figure 20. Overview of scheme for biogas-to-hydrogen conversion

Farm animals of all types including slaughter cattle, mature dairy, feeder, sheep, lambs, turkeys, Swine, laying hen, broiler, horse, heifers, calves, dairy replacement, young stock, pullets, ducks, wean pigs, yearlings, buffalo, cows were considered and their maximum hydrogen potential estimated. The rate of secretion of manure volatile solids for each of the animals listed in Table 6 were either obtained from the ASABE Standard (D384.2 Mar 2005, Manure Production and Characteristics) or assumed. Koelsch (2006) recommends the use 8 scf CH_4 per lb VS

destroyed to estimate energy potential of livestock manure. Realizing that this might vary substantially and judging from recent experiments conducted at Cornell University, it might be prudent to use a conservative estimate of 4 scf CH_4 per lb volatiles solids, according to Scott (2008) and Labatut (2008). Assuming that 50 % of VS is destroyed (contributing to biogas production), we estimated the maximum CH4 potential of various livestock. These are presented in Table 6.

Table 6. Manure volatile solids and methane potential

	Manure VS (lb/d)	**Max CH_4 potential (scfd)**
Heifers	7.1	14.2
Calves	2.3	4.6
Dairy replacement	7.1	14.2
Young stock	2.3	4.6
Pullets	0.02	0.04
Ducks	0.06	0.12
Wean pigs	0.24	0.48
Yearlings	4.35	8.7
Buffalo	13	26
Cows	17	34
Beef feeder	13	26
Slaughter	4.18	8.36
Sheep	0.85	1.7
Turkeys	0.1	0.2
Swine	0.83	1.66
Laying hen	0.05	0.1
Broiler	0.04	0.08
Horse	6.6	13.2

According to the manufacturer of the steam reformer, Harvest Energy Technology, 370 scfh CH_4 will yield 50 kg/d H_2 (Warren, 2004). Out of 633 animal operations surveyed by Ma (2006) 573 were dairy farms (100-4000 mature cow operations). Based on the above assumptions (as well as assuming 60% CH_4 in biogas), we obtained the following results for maximum hydrogen production potential, as reported in Table 7.

Table 7. Maximum H_2 available from dairy and non-dairy farms

	Max biogas available (million scfd)	**Max biogas available (million scfy)**	**Max H_2 available (Kg/d)**	**Max H_2 available (million Kg/y)**
Total from all non-dairy farms	0.875	320	2,956	1.08
Total from all dairy farms	14.85	5,420	50,196	18.3
Total from all farms in NYS	15.7	5,740	53,152	19.4

We can see that most of the biogas and hydrogen potential (over 94%) comes from dairy based operations. Hence the rest of the dissertation will focus only on the utilization of dairy manure for renewable H_2 production. Policy implications and recommendations will also be primarily based on dairy numbers. It serves to be aware once again that the numbers shown in Table 7 are for the most ideal conditions. In reality there are barriers that prevent the realization of these high quantities of biogas (and hence renewable H_2) potential such as the difficulty of collection of all manure for biogas production, obtaining 4 scf CH_4 per lb VS etc. For biogas based hydrogen production systems design, the corresponding value of 34 scfd CH_4 per cow is a plausible assumption which corresponds to an assumption of 56.7 scfd biogas potential per cow. It should be noted that of the five farms that are examined in this study, only AA and RL exceeds 56.7 scfd biogas production per cow (food waste is added to manure at RL). In the section on sensitivity analysis, a range of values of biogas production (from 40 scfd biogas per cow up to 100 scfd biogas per cow) and study its effect on hydrogen production costs has been considered. The 573 dairy farms in NYS have a range of between 100 and 4000 cows. Their distribution is

shown in Table 8 and a histogram depicting the distribution of the farms by herd size is shown in Figure 21.

Table 8. Distribution of Herd Size among NYS Dairy Farms

Herd Size	**Number of Farms**
< 200	58
200 – 300	185
300 – 500	181
500 – 1000	109
> 1000	40

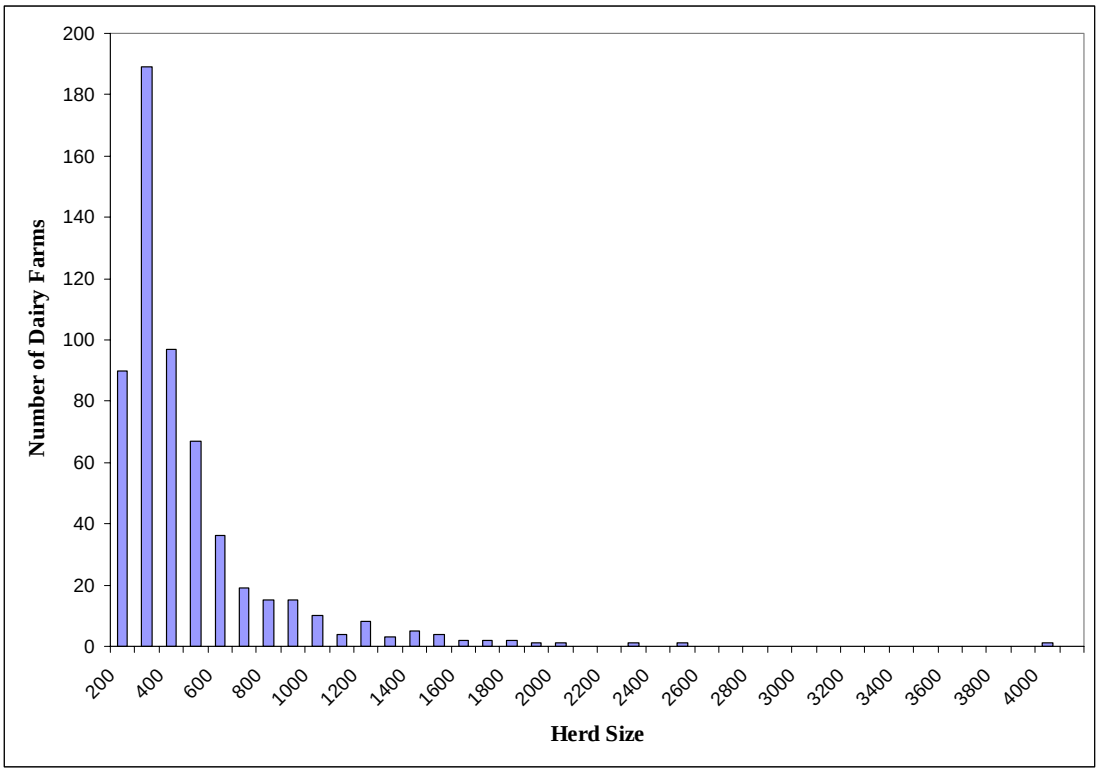

Figure 21. Distribution of NYS Dairy Farms by Herd Size

Sample calculations for future hydrogen production at a 500-cow operation (similar to AA or RL, when food waste is not co-digested with manure) are shown below. The addition of food residuals for co-digestion with animal manure will increase the biogas yields significantly. With advances in membrane technology and reformer design, higher hydrogen yields than shown here are likely.

Average biogas per cow per day = 80 – 100 ft^3

Total biogas produced per day = 40,000 – 50,000 ft^3

Total CH_4 produced (60%) per day = 24,000 – 30,000 ft^3

Total CH_4 produced per h = 1000 – 1250 ft^3

370 scfh CH_4 can generate 50 kg/d H_2 (Warren, 2004).

This represents a production potential of 135 – 168.9 kg/d renewable H_2 at a typical 500-cow dairy operation. If we assume a threshold value of 165 kg/d H_2 production potential and not consider CAFOs smaller than this, we would have eliminated 430 CAFOs. This value serves as a cut-off for determining whether hydrogen production can be economically feasible at a given dairy operation.

Number of dairy farms with H_2 potential > 165 kg/d = 203

Total H_2 achievable from the 203 farms = 18,912 kg/d = 6.9 million kg/y

To put these numbers in perspective, the annual total merchant hydrogen production in NYS (utilizing natural gas as feedstock) is about 12.93 million kg (DOE, 2008d), over half of which could potentially come from renewable resources. If H_2 prices were to fluctuate between $1.50 and $3 per kg H_2 between 2005 and 2015 according to a DOE study (Keenan et al., 2004), this would represent an annual revenue stream of $10 – $20 million per year.

As discussed in Sec 6.1, renewable hydrogen production from biogas is an economically feasible and viable option capable of generating hydrogen at prices comparable to the market price of hydrogen derived from fossil fuels. For dairy farms with no anaerobic digesters, an investment of between $761,000 (as in the case of AA) and $1,297,500 (as in the case of NH) has the potential of producing hydrogen at a cost of between $5.41/kg (AA) and $5.72/kg (NH). An investment of $878,931 in a farm with access to food residuals (like RL), has also been shown in Sec 6.1 to have the potential to generate renewable hydrogen at a cost of $1.95/kg. Investments required will be case specific, but the range of production costs presented in this dissertation indicate that hydrogen production as an option is one of the best to take. The possibility of annual revenues in the tens of millions of dollars in the state of NY indicates that these processes merit more consideration for possible future investment.

The results indicate that dairy farms in NYS have a lot of scope to supply hydrogen from dairy manure-based biogas. It is recommended that investments be made to promote development of community digesters to handle animal manure as well as other organics to contribute to this value chain.

6.3 Steps towards Demonstration of Hydrogen Production from Dairy Manure Derived Biogas

AA Dairy, a 500-cow dairy operation located at Candor, NY served as a test site for a USDA study (2003 through 2006) to demonstrate hydrogen production on a concentrated animal feeding operation. Manure (daily production of approximately 15,000 gal) from the farm is fed into an anaerobic digester, which results in the production of about 40,000 to 50,000 cubic feet of biogas per day. Currently, the biogas is being combusted in an engine generator to meet on farm power needs, with excess electricity being sold to the local utility.

New Energy Solutions, Inc., MA (NESI) and Cornell University had originally envisioned a two-stage on-site hydrogen production design. In the demonstration phase of stage one, biogas from the digester was cleaned of moisture droplets, particulates and much of the hydrogen sulfide. The cleaned gas mixture consisting primarily of methane and carbon dioxide was further proposed to be converted in stage two to ultra high-purity hydrogen in a steam reformer accompanied by a water gas shift reactor and a membrane reactor to selectively remove hydrogen. The hydrogen obtained has been demonstrated to be ultra pure (Buxbaum, R.E., 2004). Ultra pure hydrogen is defined as product H_2 with < 10 ppm CO (Tiemersma et al., 2006) and is in high demand as an industrial/research gas, especially in the fuel cell industry. Other researchers (Patil et al., 2005) have also demonstrated the use of membranes along with reformers to selectively remove H2 and produce ultra pure product H2. As a first step to realize this vision, a gas processing unit (GPU) (Figure 22) was installed in March 2006 and was shown to remove over 99.9995% of hydrogen sulfide along with most of the water droplets and particulates. According to the design this demo plant has the potential to produce 430 scfh of hydrogen at a cost (excluding digester costs) of $1.50 per 100 scfh.

Figure 22. Activated carbon beds of the Gas Processing Unit at AA Dairy

In the GPU, biogas from the digester is pressurized to over 3 inches water column by a blower. It then passes through a coalescing filter to remove most of the particulates and water droplets. Water collected in the coalescing filter drains out automatically. The biogas is then heated to about 85 F in a heater before it passes through two successive activated carbon beds where the H_2S is converted into elemental sulfur. The process is designed such that bed replacement would be required only once every six months. The configuration of dual beds allows for continuous operation even when one bed is being replaced. The bed manufacturer was originally contracted to replace used beds at no cost, thereby obviating the need for the farmer to handle the sulfur. The design requires minimum operation and maintenance and has been set up to be controlled through a computer that will also monitor the

incoming gas pressure, control and monitor the blower as well as monitor the exit H_2S concentration and shut the blower/GPU if the exit concentration is greater than the set point. If the GPU were to shut down, biogas will automatically be fed to the engine generator via a bypass valve to still enable electricity production. A simple schematic of the GPU is shown in Figure 23.

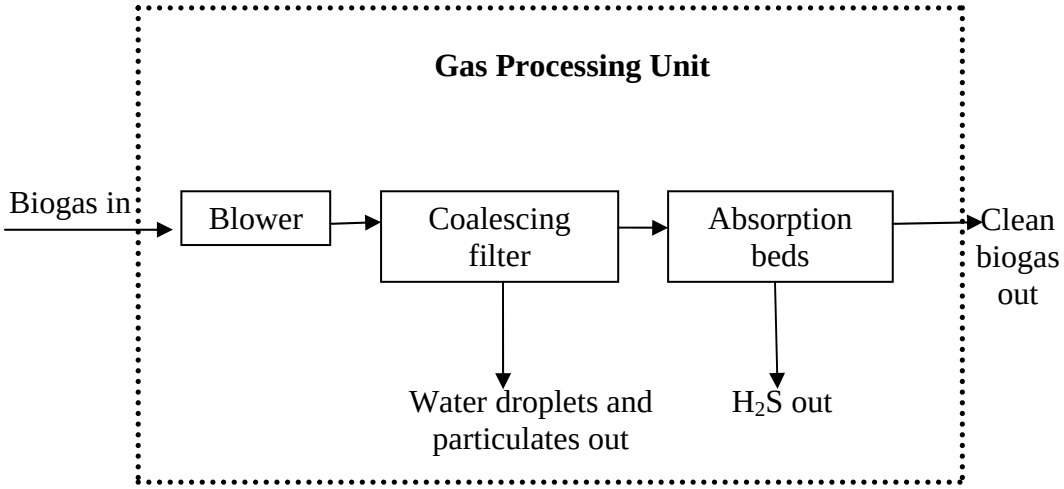

Figure 23. Schematic of the Gas Processing Unit at AA Dairy

During the initial test phase, the GPU functioned without major technical or maintenance problems from March 2006 till June 2006. The H_2S concentration in the biogas from the digester at AA has historically ranged from 2000 to 4500 ppm. After installation of the GPU, this wasvreduced to less than 5 ppm for the most part (Figure 24).

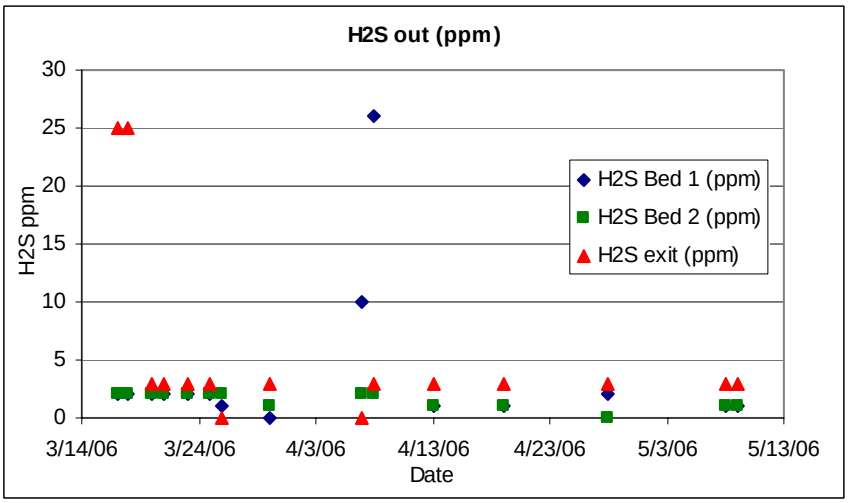

Figure 24. H_2S concentrations at exit of Bed 1, Bed 2 and exit of GPU

Water droplets were also successfully removed from the biogas. Typically biogas is saturated with moisture apart from carrying a lot of water droplets. It should be noted that the coalescing filter only removes the water droplets whereas the saturated moisture contained in the biogas is actually left as it is since it is beneficial in the reforming reactions. The pressure drop across the activated carbon beds has also been in the safe region for the most part indicating that the H_2S scrubbing is taking place as expected. The reformer was originally scheduled to be installed in Aug 2006, but due to unforeseeable circumstances, this phase of the project has been shelved. The high concentrations of H_2S exit (25 ppm) in the beginning of the project was most likely due to the fact that only one activated carbon bed was used for a short period before all valves were in place and operational. High concentrations of H_2S (over 10 ppm and over 25 ppm) were also observed on two other occasions from bed 1, and the reason for this is not very clear. However, even with gas exiting bed 1 with over 25 ppm H_2S, bed 2 was shown to achieve the required overall cleaning reducing the exit H_2S concentration to less than 5 ppm.

6.4 Spatial Analysis of Availability of Renewably Produced Hydrogen in the State of New York

Anaerobic digestion of animal manure has successfully been demonstrated for renewable energy production. The annual potential of biogas production in the state of New York from livestock manure alone is roughly 7.8 billion scf, as shown in Table 7 in Section 6.2, based on an assumption of 4 scf biogas/lb VS. It is estimated that this can yield over 26 million kg per year of renewable hydrogen. The addition of food processing residuals will increase this estimate substantially. Opportunities clearly exist for renewable hydrogen production from organic residues in NY.

It is impractical and uneconomical to build dairy manure to hydrogen energy systems at every dairy farm. Instead dairy farms can be grouped to form clusters and each cluster can then be analyzed individually to determine the best site for managing the system. Thus the problem is defined to explore ways of forming clusters of farms and to analyze a couple of them in to determine suitable locations for future central digestion of manure from farms in the selected cluster. Primary data needed are spatial locations of dairy farms, road maps, and a way to graphically represent hydrogen potential spread over NYS. Detailed geospatial coordinates of dairy farms in NYS were obtained from Ma (2006). This study is an extension of prior work done in siting centralized AD to energy systems (Ma et al., 2005). The authors provided a land suitability assessment model for siting ADs by incorporating environmental, social and some economic factors. However road network analyses for transporting manure to the centralized locations were not considered.

Methodology

Spatial locations for dairy farms projected in the Universal Transverse Mercator (UTM) system (Zone 18N, NAD 27) were obtained from Ma (2006). Dairy

farm size (number of mature cows) was used to determine biogas potential from which hydrogen production potential was estimated. This gave a good visual representation of the distribution of hydrogen availability (Figure 25) across the state. The map of Figure 26 shows the geographical distribution of CAFOs in NYS with a renewable hydrogen production potential greater than 165 kg/d.

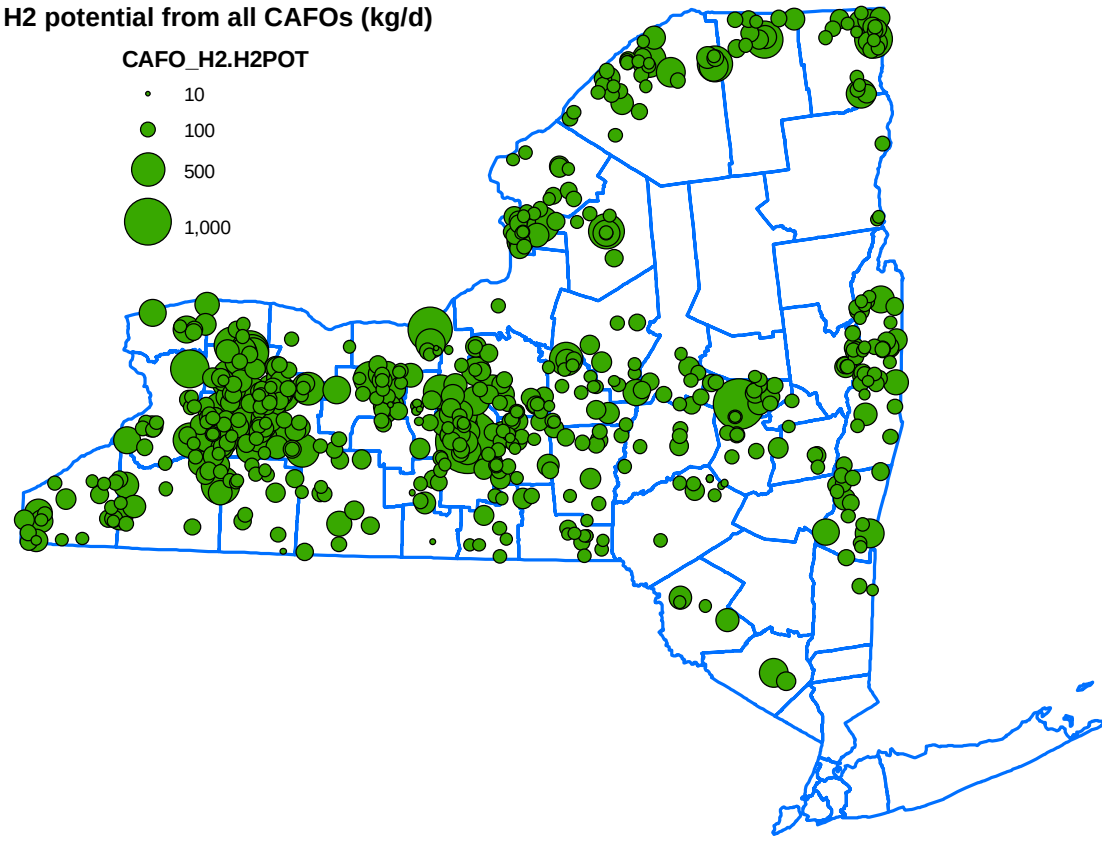

Figure 25. Distribution of annual hydrogen production potential (Kg/d) across NYS

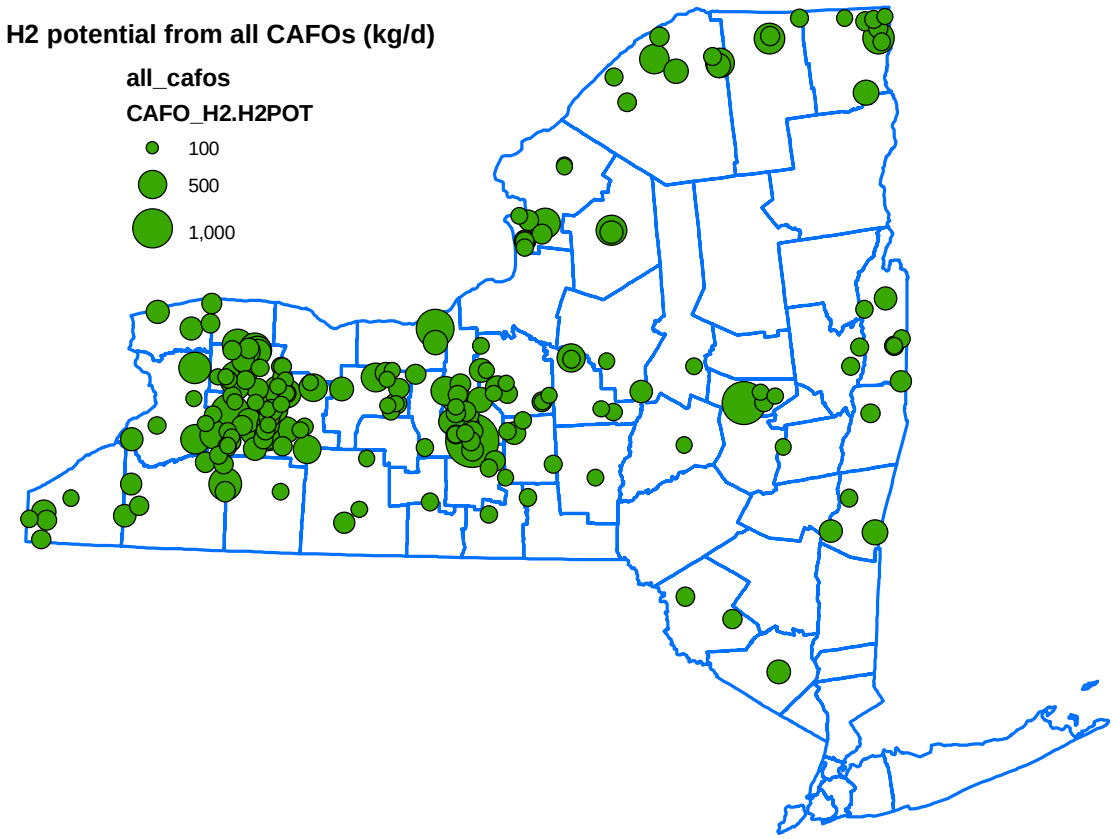

Figure 26. Renewable hydrogen potential of CAFOs in NYS greater than 165 kg/d

Detailed county and census tracts maps are available for NYS. The individual census tracts were merged into one shapefile, clipped to match the outline of NYS, and reprojected (to UTM Zone 18N NAD 27). The census tract areas were then recalculated. The use of census tracts gave unique insights into the distribution of hydrogen potential across the state (by performing a 'Join' operation of the census tracts with the H_2 production potential maps) and helped to identify clusters readily across the state (Figure 27).

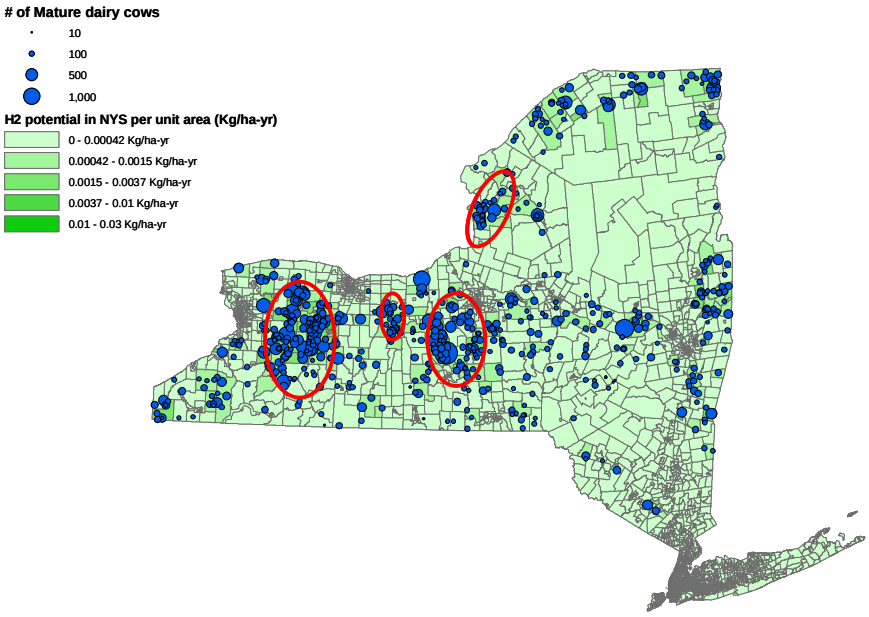

Figure 27. Potential for cluster formation among NYS dairies for hydrogen production

The distribution of annual renewable hydrogen production potential (total kg per year H_2 from a given census tract) is shown in Figure 28, and represents visually the spread of availability of renewable hydrogen across the State. Two clusters were chosen for further analysis: Cluster 1 in census tract 36121, Wyoming County and Cluster 2 in census tract 36017, Chenango County. New shapefiles containing just the spatial data from the farms and the streets of interest were generated from these clusters. The network analyst extension in ArcViews Version 9.2 (GIS and Mapping Software provided by ESRI, Inc, Redlands, California) was used to create a network dataset (using the shapefile of the selected streets in each cluster) to enable analyses over streets to be made. Street lengths were recalculated (since we selected a few from the database of the whole state) and driving times estimated manually. Route analysis and cost matrix analysis were performed to estimate driving distances and times for central digestion at either one of the farms or at another suitable centrally located point outside the individual farms.

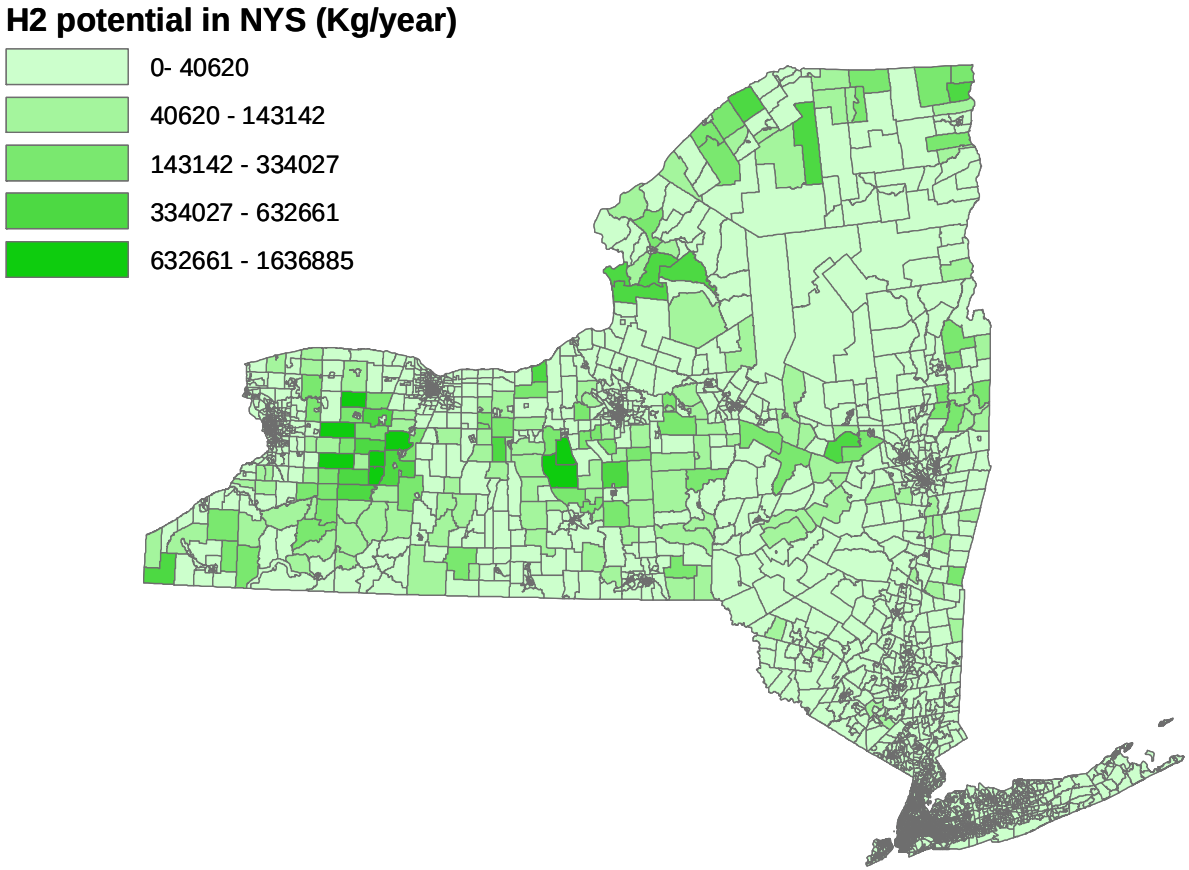

Figure 28. Distribution of annual hydrogen production in census tracts across NYS

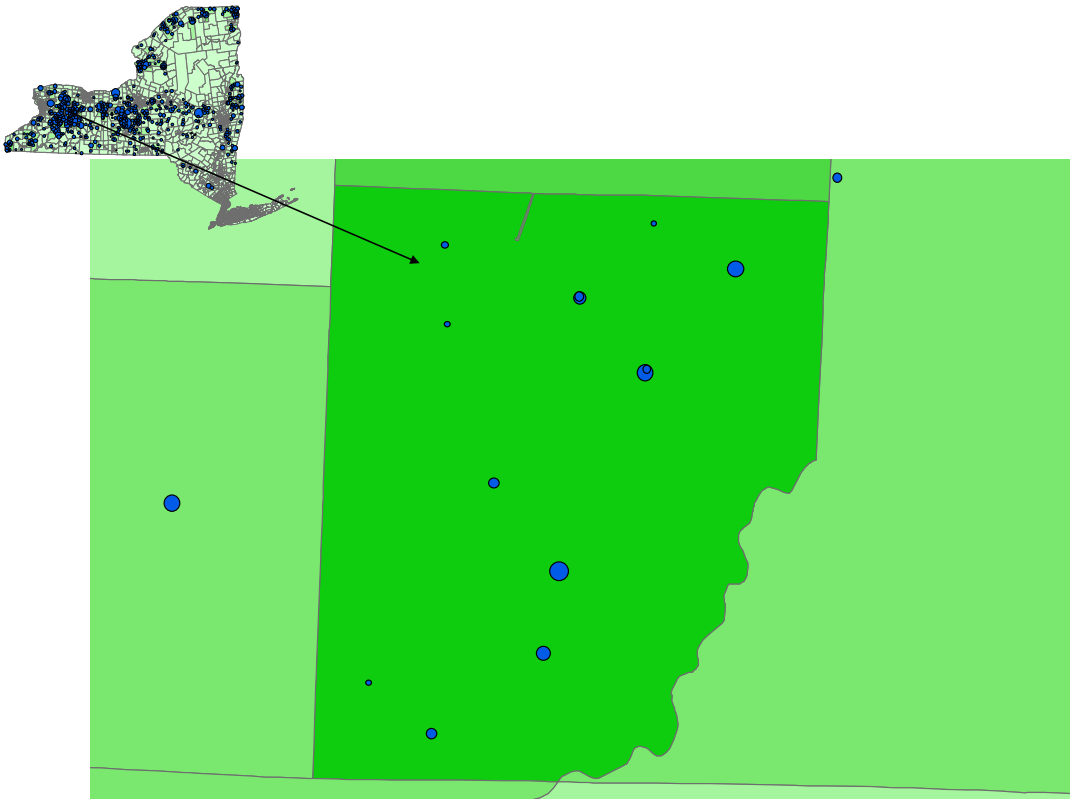

Figure 29. Census tract 36121, Wyoming County, NY showing location of CAFOs

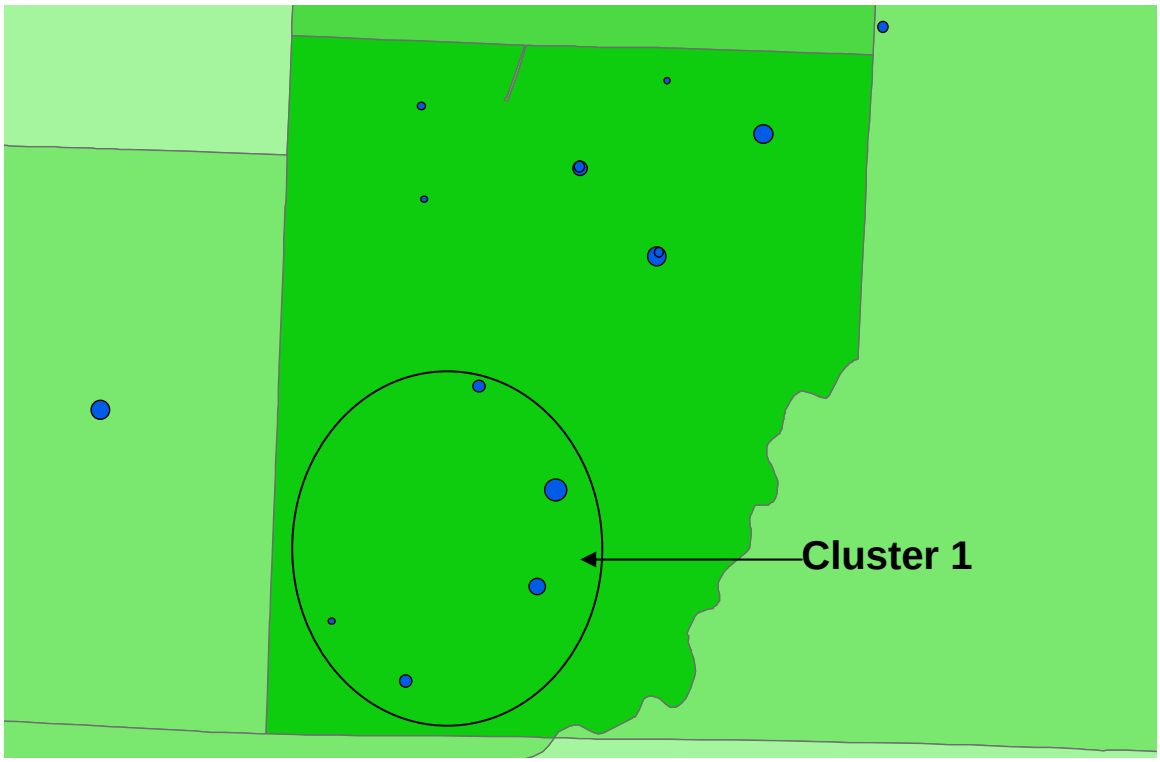

Figure 30. Sample cluster 1 showing CAFOs examined in analysis

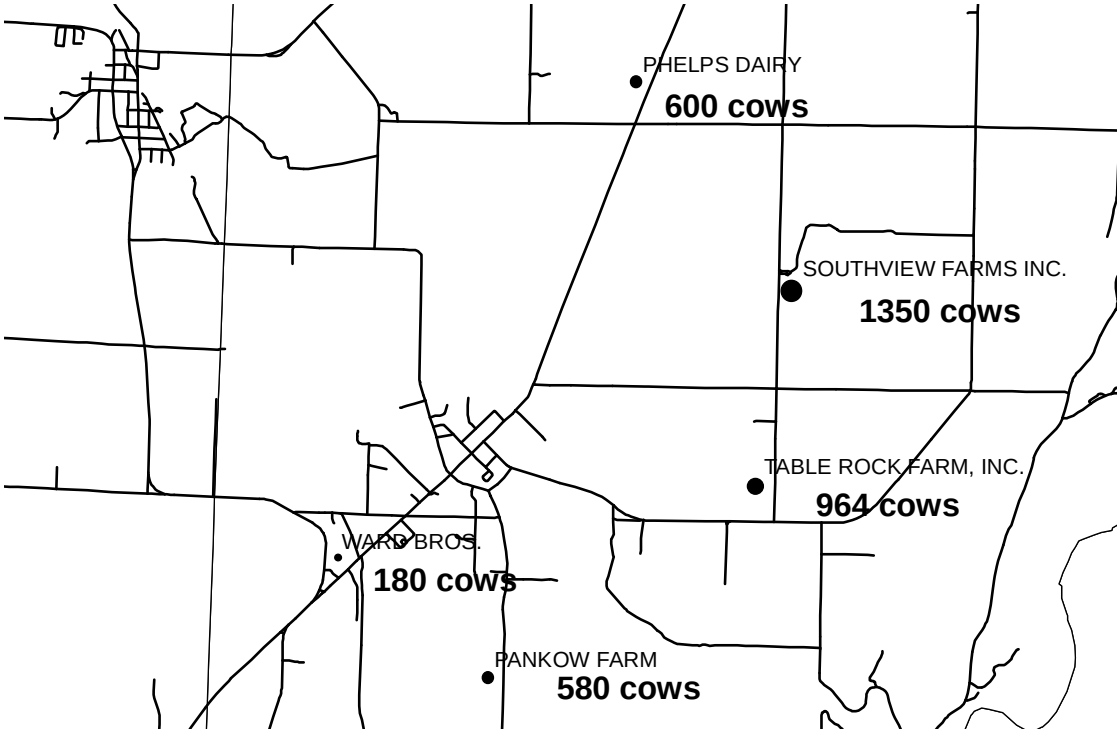

Figure 31. Cluster 1 with road map superimposed

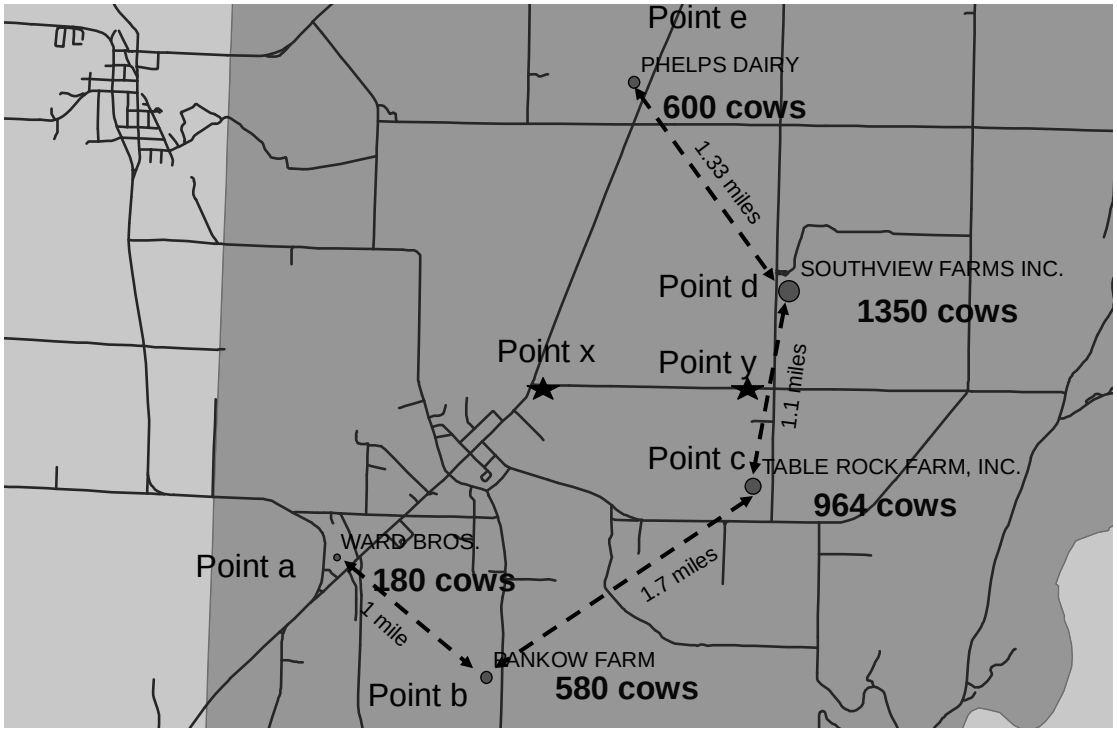

Figure 32. Cluster 1: Possible locations for siting a central digester

Table 9: Results of cluster 1 origin-destination matrix analysis

	Time (min) to drive from origin to destination on actual roads						
	Destinations						
Origins	**a**	**b**	**c**	**d**	**e**	**x**	**y**
a	0	4.3	6.4	7	5.6	2.8	5.5
b	4.3	0	6.6	8.1	6.7	3.9	6.7
c	6.4	6.6	0	2.4	6.6	4.1	1.4
d	7	8.1	2.4	0	4.2	4.2	1.4
e	5.6	6.7	6.6	4.2	0	2.9	5.6
Total (min)	23.3	25.7	22	21.7	23.1	17.9	20.6

The origin-destination (OD) matrix results have been generated based on driving time as the limiting parameter and are tabulated in Tables 9 and 10 for both clusters. The OD matrix summarizes driving time between the origin and destination. For instance in Table 9, driving time between the dairy operations Ward Brothers (Point 'a') and Pankow Farm (Point 'b') is 4.3 min. The network analyst program in ArcViews takes into account permissible driving speeds on actual roads in the cluster. The analysis assumes that if Ward Brothers (Point 'a') is chosen as the site for centralized digestion, individual trips will be made from Point 'a' to Point 'b' to pick manure from Point 'b' and then drive back to Point 'a' to deposit the manure in the centralized anaerobic digester at Point 'a'. This round trip (Ward Brothers to Pankow Farm and back) will thus take 8.6 min. Thus, if the centralized digester is indeed located at Ward Brothers, it would take a total time of about 46.6 min for all farms to truck manure to the central digester from the manure source and drive back. We can also see that, were a centralized digester be located at point x instead, the total driving time for all farms to truck manure to the digester and back will be 2 * 17.9 min = 35.8 min, which will translate to considerable savings in fuel costs when many trips are made through the year.

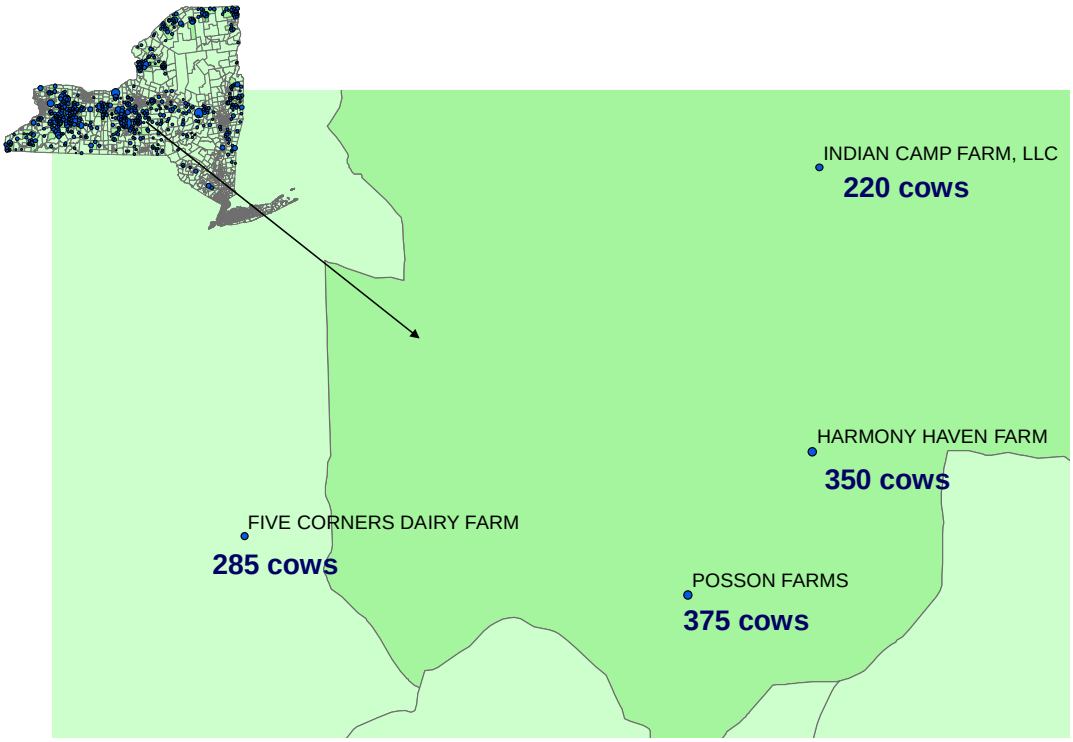

Figure 33. Census tract 36017, Chenango County, NY

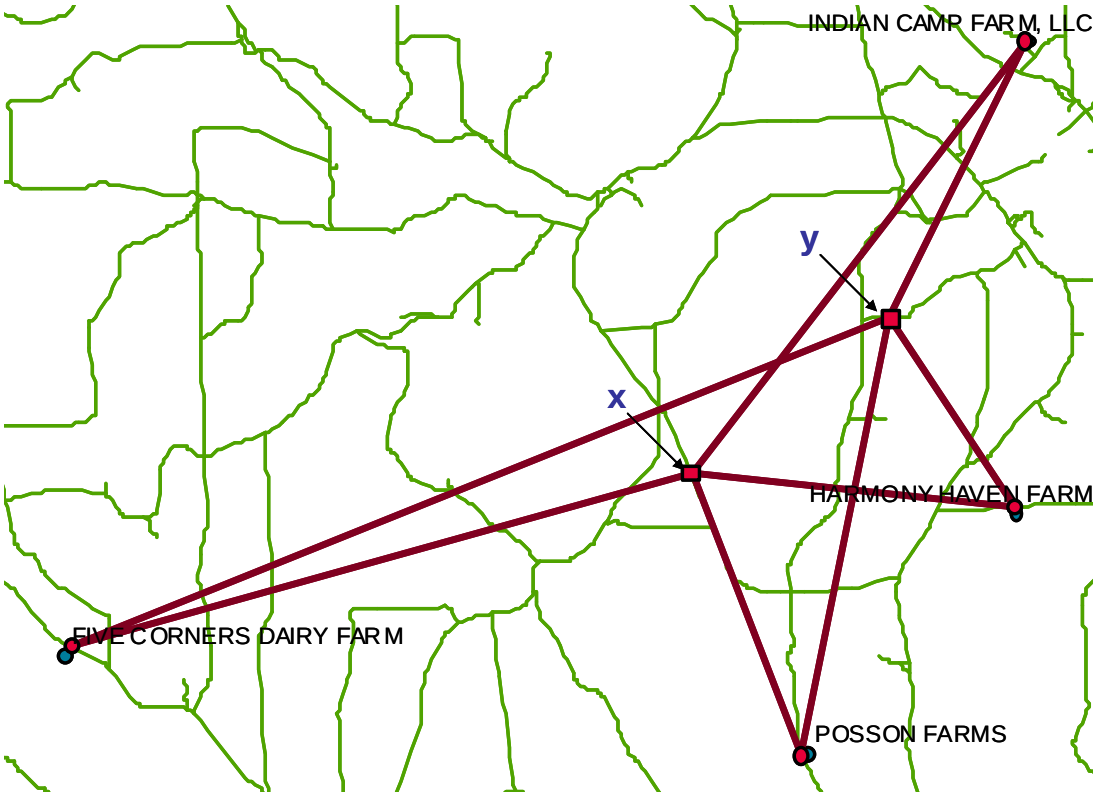

Figure 34. Cluster 2 with road map superimposed

Table 10: Results of cluster 2 origin-destination matrix analysis

	Destinations					
Origins	**a**	**b**	**c**	**d**	**x**	**y**
a	0	20.7	22.4	25.8	17.2	22.6
b	20.7	0	6.9	14.7	5.5	7.9
c	22.4	6.9	0	8.5	7	6.9
d	25.8	14.7	8.5	0	14.8	7.6
Total (min)	68.9	42.3	37.8	49	44.5	45

For Cluster 1, preliminary results (based on driving time as the limiting parameter) indicated that an optimally located digester at a central location x will have the least total driving time for manure pickup and delivery to and from all farms. This will be true only if all farms had to make the same number of trips for manure delivery to the central location. This assumption is certainly not true and needs a more careful approach in determining 'manure-miles' and 'manure-minutes' to be able to exactly compare distances and times of all farms on the same footing. Based on the fact that Southview farms has 1350 cows and might perhaps require more than one trip for transporting all the manure, it has been assumed for the present that locating a central AD system at this farm will be the best choice. It might also be beneficial to have AD systems on farm rather than off for safety and legal aspects as well. Better algorithms for optimizing a site location based on 'manure-miles' and 'manure-minutes' need to be developed in the near future and used in combination with geospatial analyses.

Cluster 2 is different than Cluster 1 in many aspects. The typical distance between farms is much larger and the size of the farms is much smaller. The cost matrix indicated that the best option for central AD would be at one of the farms, Harmony Haven Farm. For future improvements to this study, other constraints such as hydrology, topography, land use etc need to be considered. A more rigorous economic analysis including all costs and expenses (such as biogas cleanup, transport,

AD construction, hydrogen production etc) is needed, but the analysis presented above gives us a basis to begin these types of investigations. Potential hydrogen markets can further be added as map layers to visually enable planners to design better hydrogen infrastructure by locating renewable hydrogen production facilities (such as centralized digesters) close to where the product H_2 might be used.

7 RESULTS AND DISCUSSION

7.1 Sensitivity Analyses

A spreadsheet based simulation model was developed to construct base case scenarios by taking into consideration the most important aspects of hydrogen production and utilizing feasible and realistic data. Sensitivity analyses were then carried to analyze the effect of changes in some of the uncertain data that most influenced the cost of production of hydrogen from dairy manure derived biogas on dairy farms. For the parameters that fluctuated considerably, such as biogas production per day per cow, availability of government grants for farm-based renewable energy projects etc, the effect of change of these parameters by keeping all other variables constant was examined.

The unit cost of product hydrogen ($/kg) under business as usual (BAU) conditions varies considerably across the five farms investigated and these are shown (from highest cost of H_2 production at FA to lowest cost of H_2 production at RL, with co-digestion of manure and food wastes) in Figure 38 (H_2 production with CO_2 removal) and Figure 39 (H_2 production without CO_2 removal). The market prices of H_2 as a compressed gas in the pipeline as well as a compressed gas in tube trailers have also been represented on the plots. It is clear from Figures 38 and 39 that other than FA, the other four farms (namely AA, NHV, RL and NH) all have the potential to produce H_2 at costs comparable to the market price of H_2. The upper and lower limits for the H_2 market price (as compressed gas in the pipeline as well as compressed gas in tube trailers) are indicated in Figures 38 and 39 as two pairs of dotted lines and when any of the farms' production costs fall within these 'bands', it is considered a profitable and economically feasible venture. For H_2 production with the removal of CO_2 (the option with higher costs of H_2 production), H_2 production at AA and NHV is

profitable only when biogas production per cow per day exceeds 60 scf, while NH and RL are profitable for the entire range of biogas production per cow per day that has been considered (40 scf through 100 scf). For H_2 production without the removal of CO_2 (the option with higher H_2 yields and therefore lower costs of H_2 production), H_2 production is a profitable venture on all farms examined except FA. The availability of economic benefits for separating CO_2 (either directly or via mechanisms such as carbon credits) will have an impact on project economics, but it would entail additional costs for capture and sequestration.

It is also clear from Figures 38 and 39 that the addition of food wastes for co-digestion yields the lowest per unit cost of H_2 production, primarily owing to vastly increased biogas (and hence H_2) yields. Exact biogas yields from the co-digestion of food processing waste and other organic residues with dairy manure will have to be determined on a case specific basis and could vary widely depending on the amount and type of substrate added. Some values for biogas yields from co-digestion used in the section on economic analyses were obtained from Labatut (2008). The economic analyses performed do not take into consideration additional factors related to availability of food processing waste for co-digestion (including capital, contractual agreements, tipping fees etc) and present a generic case (for future farms with no digesters) with only dairy manure being the primary source of hydrogen production. The case of RL is included since the data available provides valuable insight into a case where the farm has been successfully co-digesting manure with food processing residuals (and obtaining tipping fees as well).

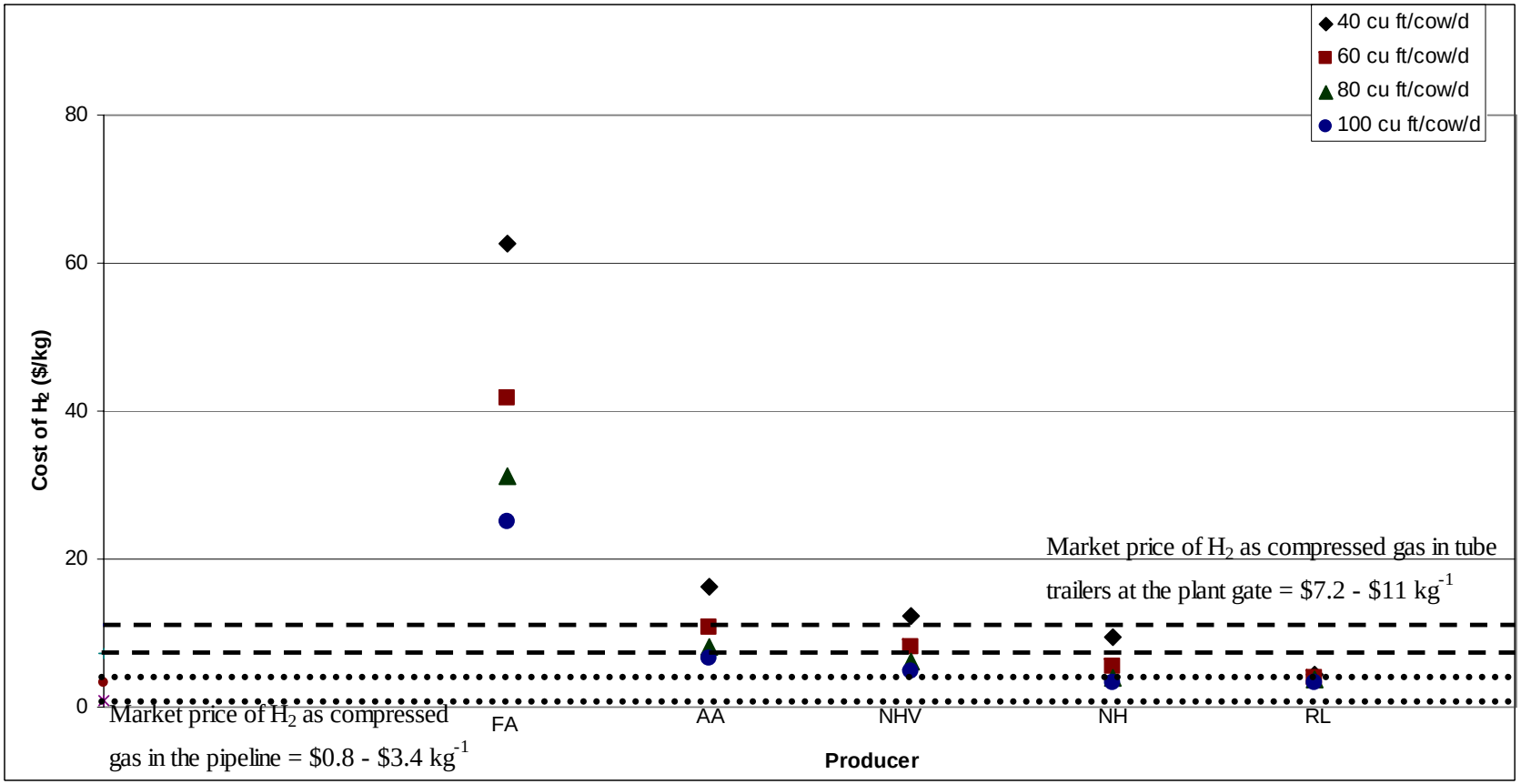

Figure 38. Variation in H_2 production cost (with CO_2 removal) across all five farms examined

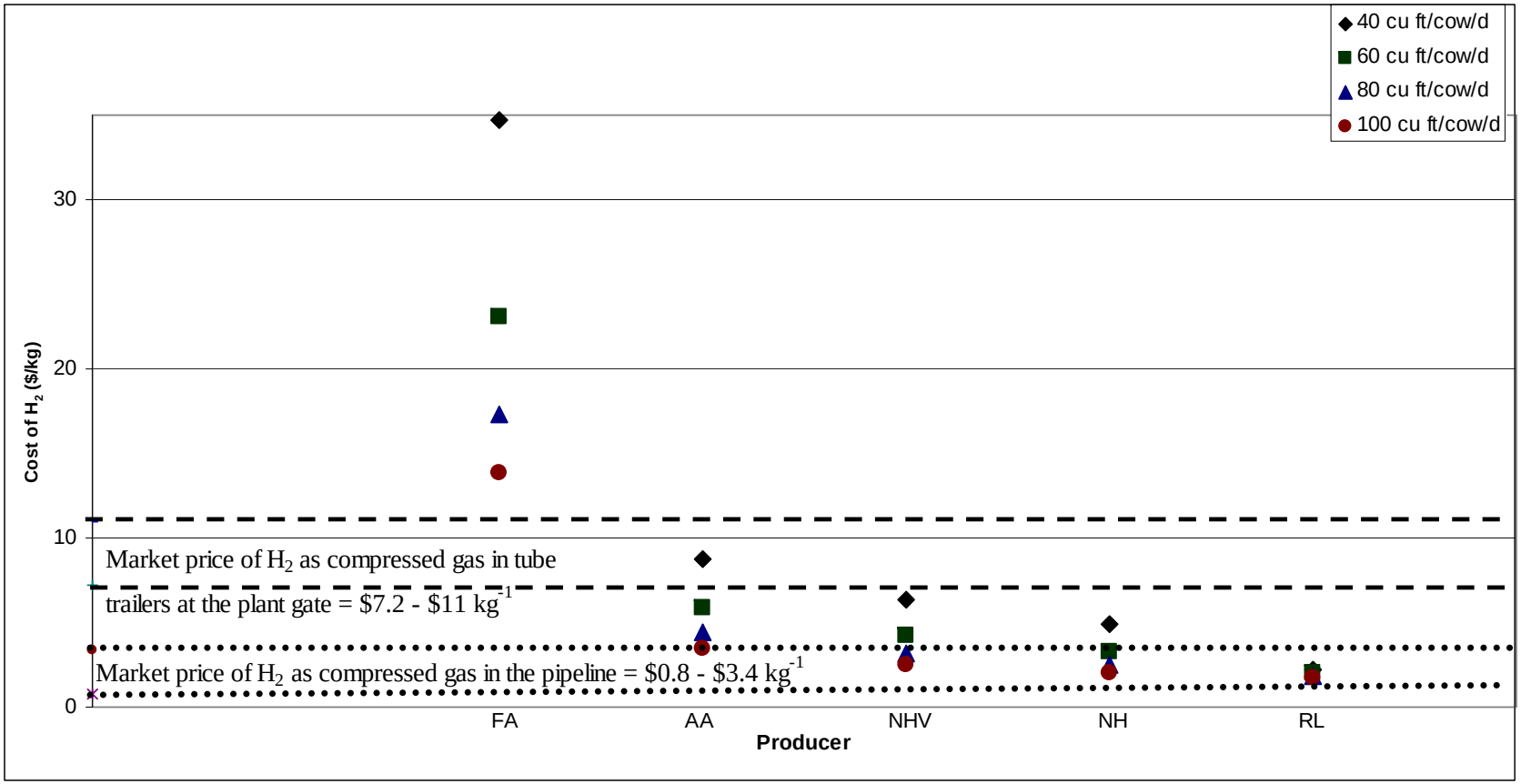

Figure 39. Variation in H_2 production cost (without CO_2 removal) across all five farms examine

From the spreadsheet based simulation model that has been developed it is concluded that three of the main parameters that were uncertain were biogas production per cow per day, unit price of electricity purchased and capital costs. The effect of increases in biogas production per cow per day, increases in unit price of electricity purchased from the utility and availability of government subsidies to cover a portion of the capital cost, on the unit cost of renewable product hydrogen were then analyzed. All sensitivity analyses took into consideration both options of renewable hydrogen production namely with and without removal of CO_2. Additionally, in the case of sensitivity analyses for a farm like RL, options investigating both presence and absence of food processing residuals to be co-digested with manure have been considered. The unit cost of product H_2 ($/kg) for the three sensitivity analyses performed are presented in Tables 11, 12 and 13. Biogas production per cow per day has a considerable effect on overall product cost as seen in Table 11.

The addition of food processing waste and other organics will have a significant impact on net hydrogen production capabilities and hence will demand additional investment (including digester, mixing equipment, transportation costs, though if convenient arrangements are made certain processors might be willing to pay a tipping fee to digester owners (this has been the case for a dairy operator in NYS who was doubly benefiting from the tipping fees paid as well as the increased biogas production from the digester. The availability of tipping fees and the contractual arrangements are likely to have a considerable impact on future digester and farm-based renewable energy economics.

Table 11: Sensitivity Analysis: Effect of Biogas Production on H_2 Cost

BAU: Biogas production per day per cow as reported					
	AA (66 ft^3)	**NHV (23 ft^3)**	**FA (12 ft^3)**	**RL (251 ft^3) ***	**NH (35 ft^3)**
H_2 cost[1] ($/kg)	10.07	21.24	203.01	3.88	9.38
H_2 cost[2] ($/kg)	5.41	11.07	112.53	1.95	5.72
Biogas production per day per cow = 40 cu ft					
	AA	**NHV**	**FA**	**RL**	**NH**
H_2 cost[1] ($/kg)	16.30	12.22	62.57	4.31[a] 23.98[b]	8.09
H_2 cost[2] ($/kg)	8.76	6.37	34.68	2.17[a] 12.04[b]	4.93
Biogas production per day per cow = 60 cu ft					
	AA	**NHV**	**FA**	**RL**	**NH**
H_2 cost[1] ($/kg)	10.87	8.15	41.71	3.96[a] 15.98[b]	5.39
H_2 cost[2] ($/kg)	5.84	4.25	23.12	1.99[a] 8.03[b]	3.29
Biogas production per day per cow = 80 cu ft					
	AA	**NHV**	**FA**	**RL**	**NH**
H_2 cost[1] ($/kg)	8.15	6.11	31.28	3.66[a] 11.99[b]	4.04
H_2 cost[2] ($/kg)	4.38	3.18	17.34	1.84[a] 6.02[b]	2.47
Biogas production per day per cow = 100 cu ft					
	AA	**NHV**	**FA**	**RL**	**NH**
H_2 cost[1] ($/kg)	6.52	4.89	25.03	3.40[a] 9.59[b]	3.24
H_2 cost[2] ($/kg)	3.50	2.55	13.87	1.71[a] 4.82[b]	1.97

*: Manure co-digested with food processing residuals at RL
1: H_2 production option 1 (with CO_2 removal)
2: H_2 production option 2 (no CO_2 removal)
a: Assumes same quantity of food residuals added to manure at RL
b: Assumes food residuals not available at RL

Table 12: Sensitivity Analysis: Effect of Electricity Price on H_2 Cost[c]

Price of electricity = $0.09/kWh					
	AA	**NHV**	**FA**	**RL**	**NH**
H_2 cost[1] ($/kg)	8.15	6.11	31.28	3.66[a] 11.99[b]	4.04
H_2 cost[2] ($/kg)	4.38	3.18	17.34	1.84[a] 6.02[b]	2.47
Price of electricity = $0.15/kWh					
	AA	**NHV**	**FA**	**RL**	**NH**
H_2 cost[1] ($/kg)	9.57	7.31	33.94	3.75[a] 12.30[b]	4.16
H_2 cost[2] ($/kg)	5.06	3.76	18.61	1.88[a] 6.17[b]	2.52
Price of electricity = $0.30/kWh					
	AA	**NHV**	**FA**	**RL**	**NH**
H_2 cost[1] ($/kg)	13.13	10.32	40.56	3.99[a] 13.09[b]	4.46
H_2 cost[2] ($/kg)	6.76	5.19	21.76	2.00[a] 6.55[b]	2.66

1: H_2 production option 1 (with CO_2 removal)
2: H_2 production option 2 (no CO_2 removal)
a: Food residuals added to manure at RL
b: Food residuals not available at RL
c: Assumption: biogas production = 80 cu ft per day per cow on all farms

All economic analysis presented in Chapter 6 accounted for the overall system costs and did not consider in detail the sources for these expenses. The lack of availability of capital to install on-farm anaerobic digester systems and procure equipment for process intensive operations for biogas application could well be a major factor inhibiting the growth of these types of systems in the US. There is federal support available to farmers in the form of programs such as AgStar for installing anaerobic digesters for renewable energy production. This dissertation examined only the system costs, and therefore obtained unit prices of products that could potentially be produced on farm for sale to generate revenue. Assumptions about government subsidies as percentages of capital costs have been made and their effect on product cost is given in Table 13.

Table 13: Sensitivity Analysis: Effect of Government Subsidies on H_2 Cost[c]

Government subsidies = 0% of capital costs					
	AA	**NHV**	**FA**	**RL**	**NH**
H_2 cost[1] ($/kg)	8.15	6.11	31.28	3.66[a] 11.99[b]	4.04
H_2 cost[2] ($/kg)	4.38	3.18	17.34	1.84[a] 6.02[b]	2.47
Government subsidies = 10% of capital costs					
	AA	**NHV**	**FA**	**RL**	**NH**
H_2 cost[1] ($/kg)	7.62	5.74	29.21	3.46[a] 11.35[b]	3.81
H_2 cost[2] ($/kg)	4.05	2.97	15.99	1.72[a] 5.64[b]	2.29
Government subsidies = 25% of capital costs					
	AA	**NHV**	**FA**	**RL**	**NH**
H_2 cost[1] ($/kg)	6.83	5.19	26.11	3.17[a] 10.38[b]	3.45
H_2 cost[2] ($/kg)	3.56	2.64	13.95	1.54[a] 5.06[b]	2.02
Government subsidies = 50% of capital costs					
	AA	**NHV**	**FA**	**RL**	**NH**
H_2 cost[1] ($/kg)	5.52	4.27	20.93	2.68[a] 8.77[b]	2.86
H_2 cost[2] ($/kg)	2.75	2.10	10.56	1.25[a] 4.11[b]	1.58
Government subsidies = 75% of capital costs					
	AA	**NHV**	**FA**	**RL**	**NH**
H_2 cost[1] ($/kg)	4.20	3.35	15.76	2.19[a] 7.17[b]	2.27
H_2 cost[2] ($/kg)	1.93	1.56	7.17	0.96[a] 3.15[b]	1.13

1: H_2 production option 1 (with CO_2 removal)
2: H_2 production option 2 (no CO_2 removal)
a: Food residuals added to manure at RL
b: Food residuals not available at RL
c: Assumptions: subsidies are only a percentage of capital costs over a project life of 10 years; biogas production = 80 cu ft per day per cow on all farms

Table 14 summarizes the results of all sensitivity analyses by reporting the percent change in unit cost of product hydrogen for the options considered with respect to the base case.

Table 14. Summary of Sensitivity Analyses

Effect of an increase in biogas production (% decrease in H_2 cost with respect to BAU)					
Assumed biogas production	**AA** (BAU: 66 ft^3 cow^{-1} d^{-1})	**NHV** (BAU: 23 ft^3 cow^{-1} d^{-1})	**FA** (BAU: 12 ft^3 cow^{-1} d^{-1})	**RL** (BAU: 251[c] ft^3 cow^{-1} d^{-1})	**NH** (BAU: 35 ft^3 cow^{-1} d^{-1})
80 ft^3 cow^{-1} d^{-1} (options 1 and 2)	19.08	71.23	84.59	5.72[a] 18.75[b]	56.89
100 ft^3 cow^{-1} d^{-1} (options 1 and 2)	35.27	76.99	87.67	12.30[a] 35.00[b]	65.51
Effect of an increase in biogas production (% decrease in H_2 cost with respect to base case, assuming biogas production of 60 ft^3 cow^{-1} d^{-1} on all farms as base case)					
Assumed biogas production	**AA**	**NHV**	**FA**	**RL**	**NH**
80 ft^3 cow^{-1} d^{-1} (options 1 and 2)	25.00	25.00	25.00	7.62[a] 25.00[b]	25.00
100 ft^3 cow^{-1} d^{-1} (options 1 and 2)	40.00	40.00	40.00	14.07[a] 40.00[b]	40.00
Effect of an increase in price of electricity purchased (%increase in H_2 cost with respect to base case, assuming $0.09/kWh as base case price)					
Assumed unit price of electricity	**AA**	**NHV**	**FA**	**RL**	**NH**
$0.15/kWh (option 1)	17.48	19.71	8.48	2.64[a] 2.64[b]	2.93
$0.15/kWh (option 2)	15.50	18.02	7.29	2.50[a] 2.50[b]	2.29
$0.30/kWh (option 1)	61.16	68.97	29.67	9.23[a] 9.23[b]	10.27
$0.30/kWh (option 2)	54.23	63.06	25.51	8.76[a] 8.76[b]	8.02
Effect of availability of subsidies[d] (%increase in H_2 cost with respect to base case, assuming no subsidies as base case price)					
Assumed availability of subsidies	**AA**	**NHV**	**FA**	**RL**	**NH**
10% of capital (option 1)	6.36	6.03	6.62	5.36	5.86

Table 14 (continued). Summary of Sensitivity Analyses

10% of capital (option 2)	7.45	6.81	7.82	6.35	7.23
25% of capital (option 1)	16.16	15.07	16.55	13.41	14.66
25% of capital (option 2)	18.63	17.04	19.55	15.87	18.07
50% of capital (option 1)	32.31	30.15	33.09	26.82	29.31
50% of capital (option 2)	37.26	34.07	39.10	31.74	36.15
75% of capital (option 1)	48.47	45.22	49.64	40.23	43.97
75% of capital (option 2)	55.89	51.11	58.65	47.61	54.22

Option 1: H_2 production with CO_2 removal; Option 2: H_2 production without CO_2 removal; a): Food residuals added to manure at RL; b): Food residuals not available at RL; c): Base case assumed to be 65 ft^3 cow^{-1} d^{-1} if food residuals not available at RL d). Subsidies are assumed to cover a certain % of all capital costs

In Figures 37 and 38, we present the effect of biogas production on H_2 cost (with and without CO_2 removal). They also include representations of a hypothetical case for RL when no food waste is available for co-digestion. This serves as a basis for evaluating farms (for renewable H_2 production) with similar size and investment as RL but without any access to food processing residuals. It is clear from Figure 37 that for the option of H_2 production with CO_2 removal, NH and RL (food waste co-digested) are profitable even for biogas yields as low as 40 scf per cow per day. H_2 production with CO_2 removal at NHV and AA are not profitable so long as biogas yields are 40 scf per cow per day or less. H_2 production with CO_2 removal at FA does not have the potential to be a profitable option even when biogas yields are as high as 100 scf per cow per day. For a farm similar to RL in size and investment made, biogas yields need to be around 100 scf per cow per day for H_2 production with CO_2 removal to be economically viable. As seen in Figure 38, for the option of H_2 production without CO_2 removal, all farms except FA have the potential to generate profits. It should be noted that in Figures 37 and 38, the plot for RL (with food waste

co-digested) represents equivalent biogas yields per cow per day (over 200 scf) since food waste is added to manure for co-digestion.

In Figures 39 and 40, we present the effect of increases in the purchase price of electricity on H_2 production cost (with and without CO_2 removal). H_2 production at FA is not profitable even for the lowest electricity purchase price considered. From the plots, it is interesting to note that even for electricity prices to the tune of \$0.21/kWh, all farms still have the potential to produce H_2 at costs below the market price for both production routes (except the case of AA when the price is \$0.21/kWh). One can expect that as electricity prices increase, so will the market price of H_2 and this will probably keep profitability margins high for the H_2 production option.

The effect of availability of subsidies (as a % of total capital cost) on H_2 production cost (with and without CO_2 removal) is presented in Figures 41 and 42. We assume that subsidies will be available to offset high initial capital costs and in keeping the methodology for economic analysis for the various biogas utilization options, we have estimated a levelized amount (net present worth of subsidies, given the amount of subsidy and the years during which it is available) in case subsidies are available and subtracted it from the levelized annual costs for capital. While it is clear from Figures 41 and 42 that even without any subsidies, it is possible to produce H_2 (with or without CO_2 removal), the availability of subsidies of 50% or more of total capital costs has the potential to reduce H_2 production cost substantially.

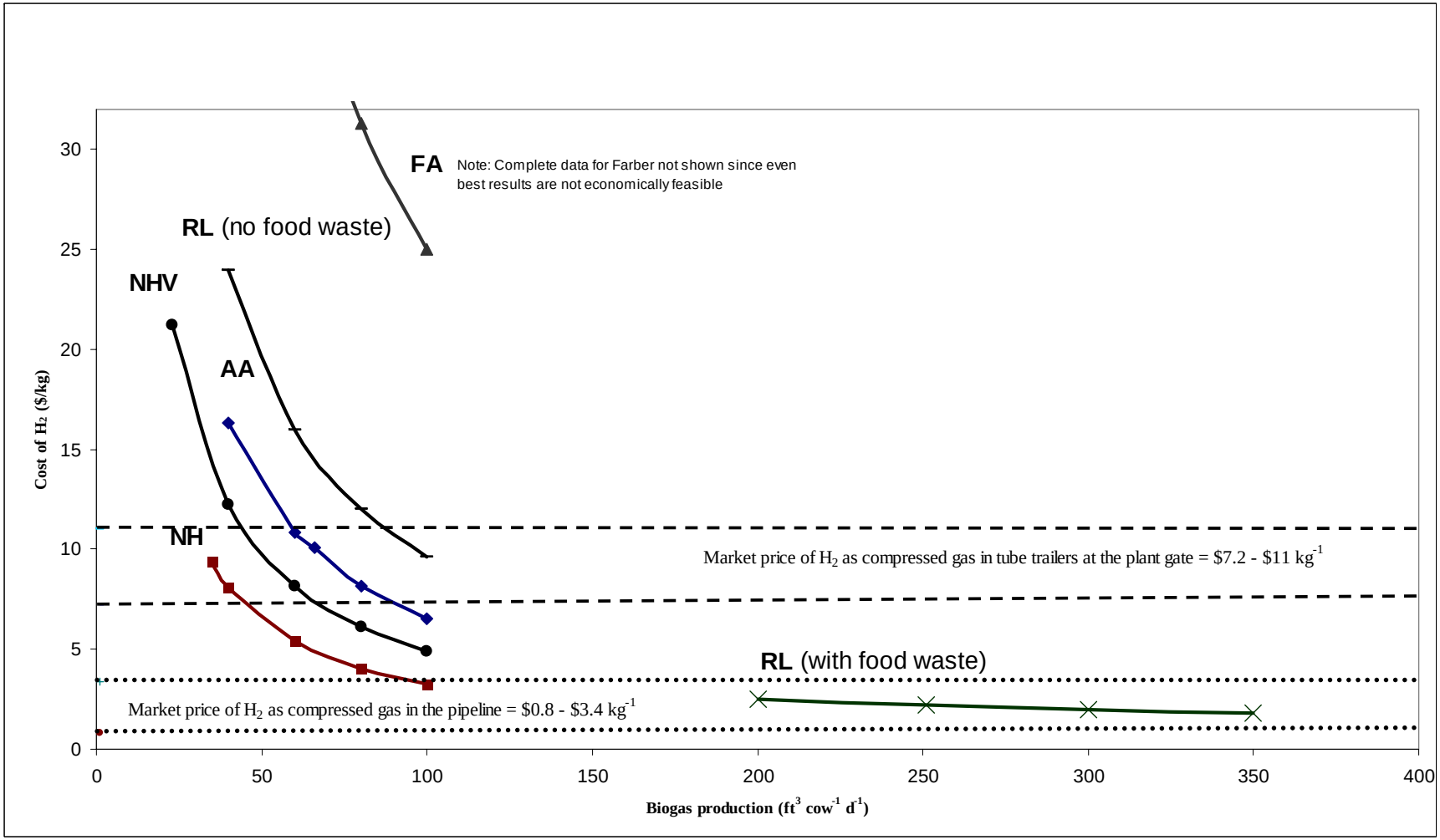

Figure 37. Effect of biogas production on H_2 cost (with CO_2 removal)

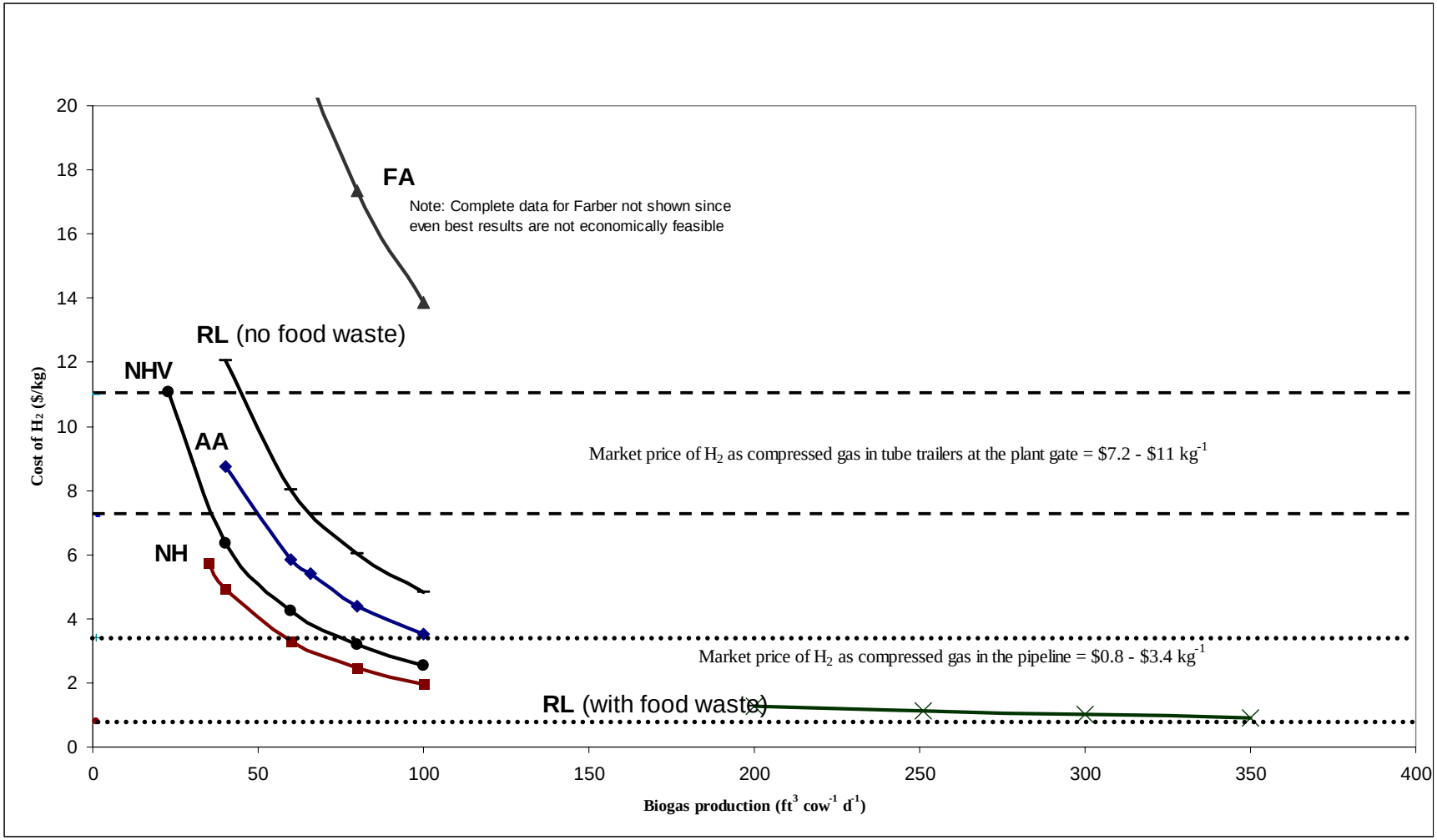

Figure 38. Effect of biogas production on H_2 cost (without CO_2 removal)

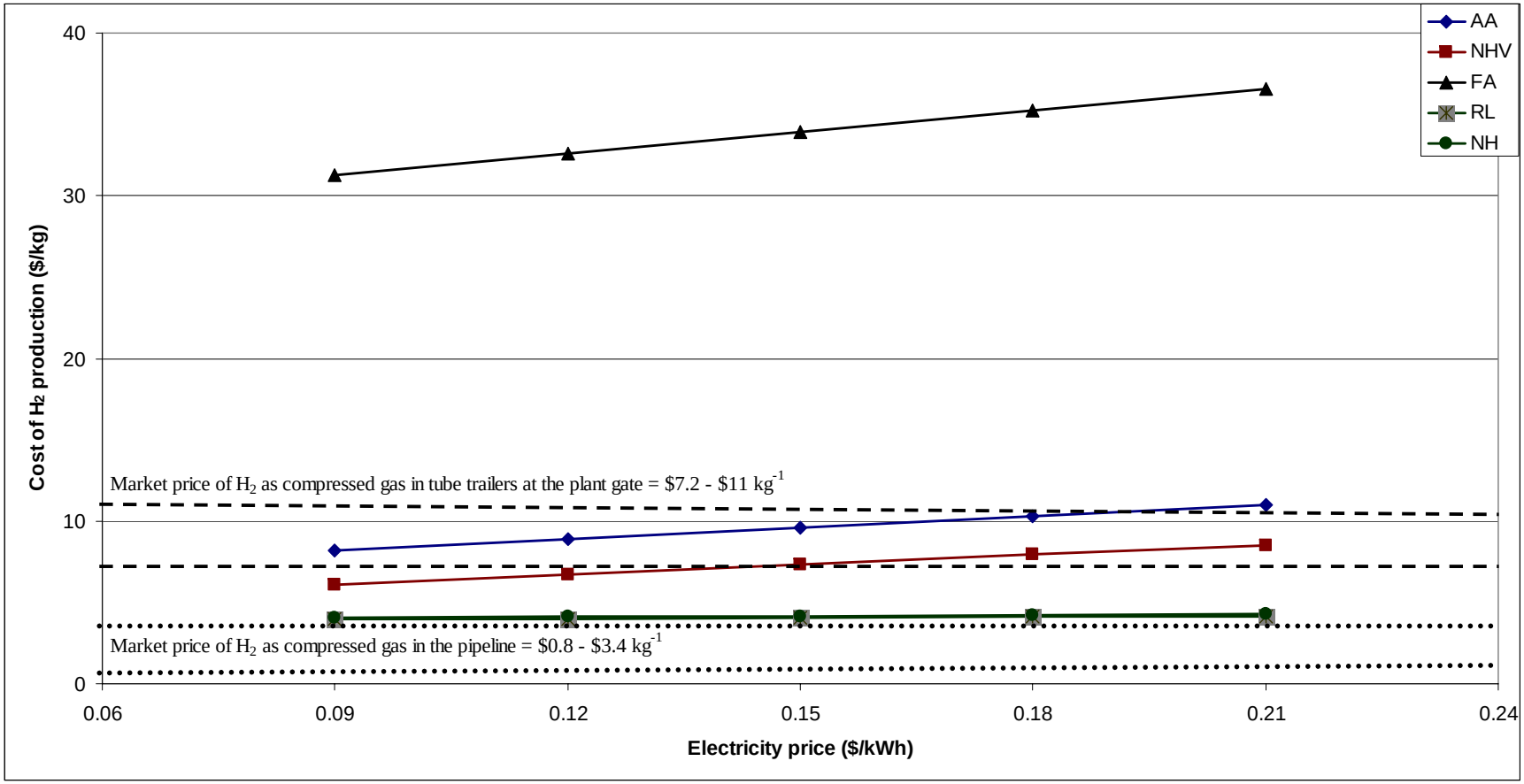

Figure 39. Effect of electricity price on H_2 cost (with CO_2 removal)

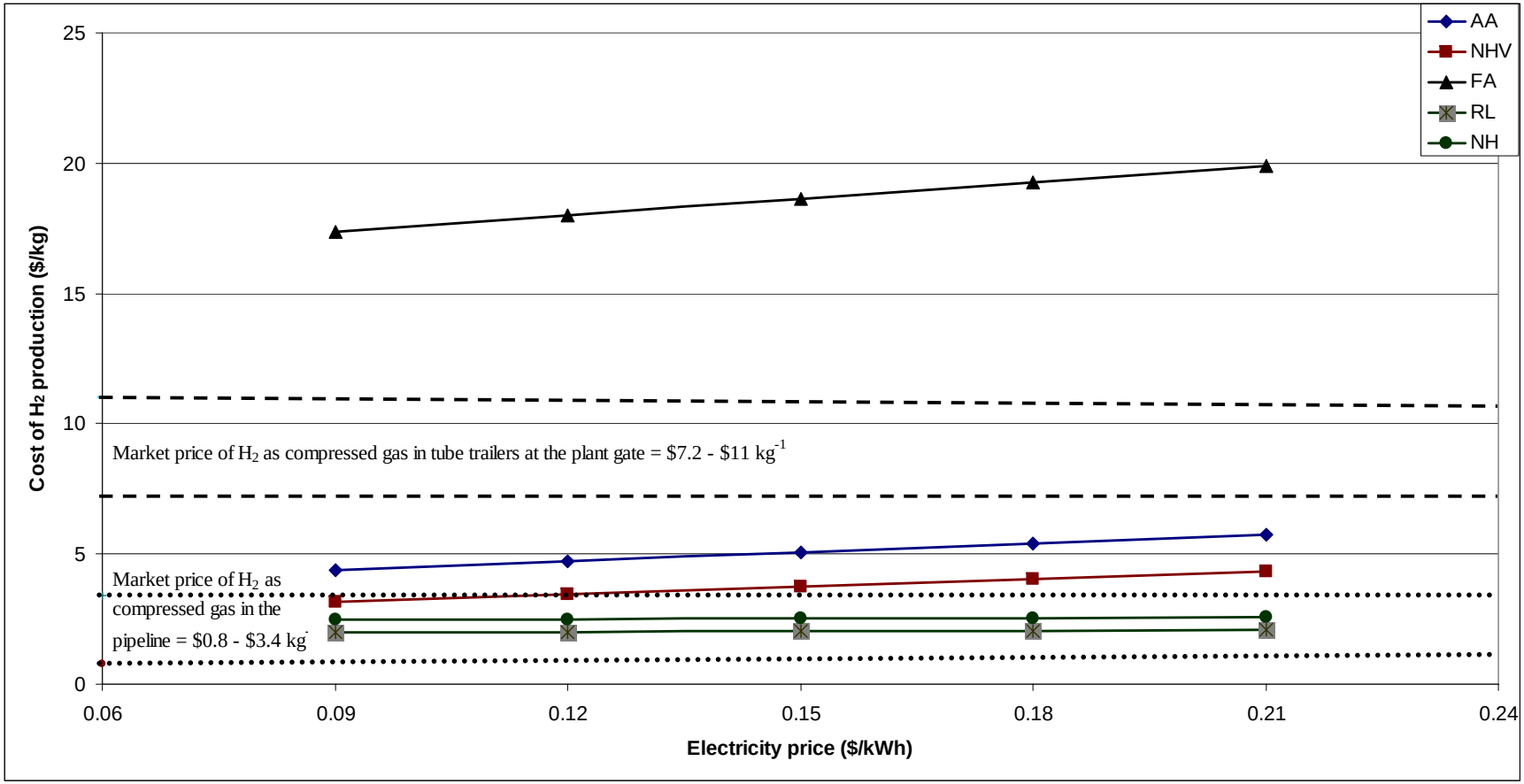

Figure 40. Effect of electricity price on H_2 cost (without CO_2 removal)

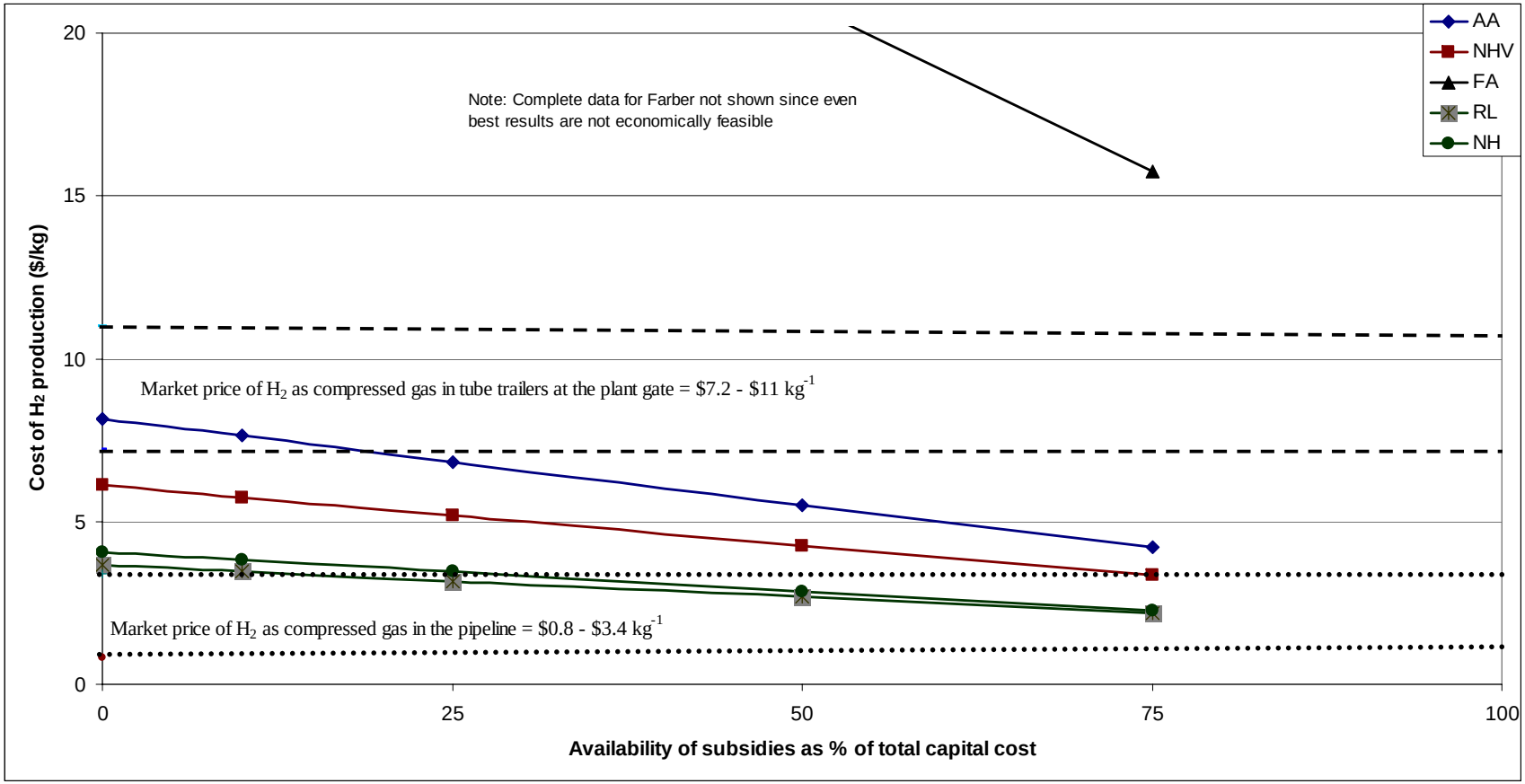

Figure 41. Effect of availability of subsidies as a % of total capital cost on H_2 cost (with CO_2 removal)

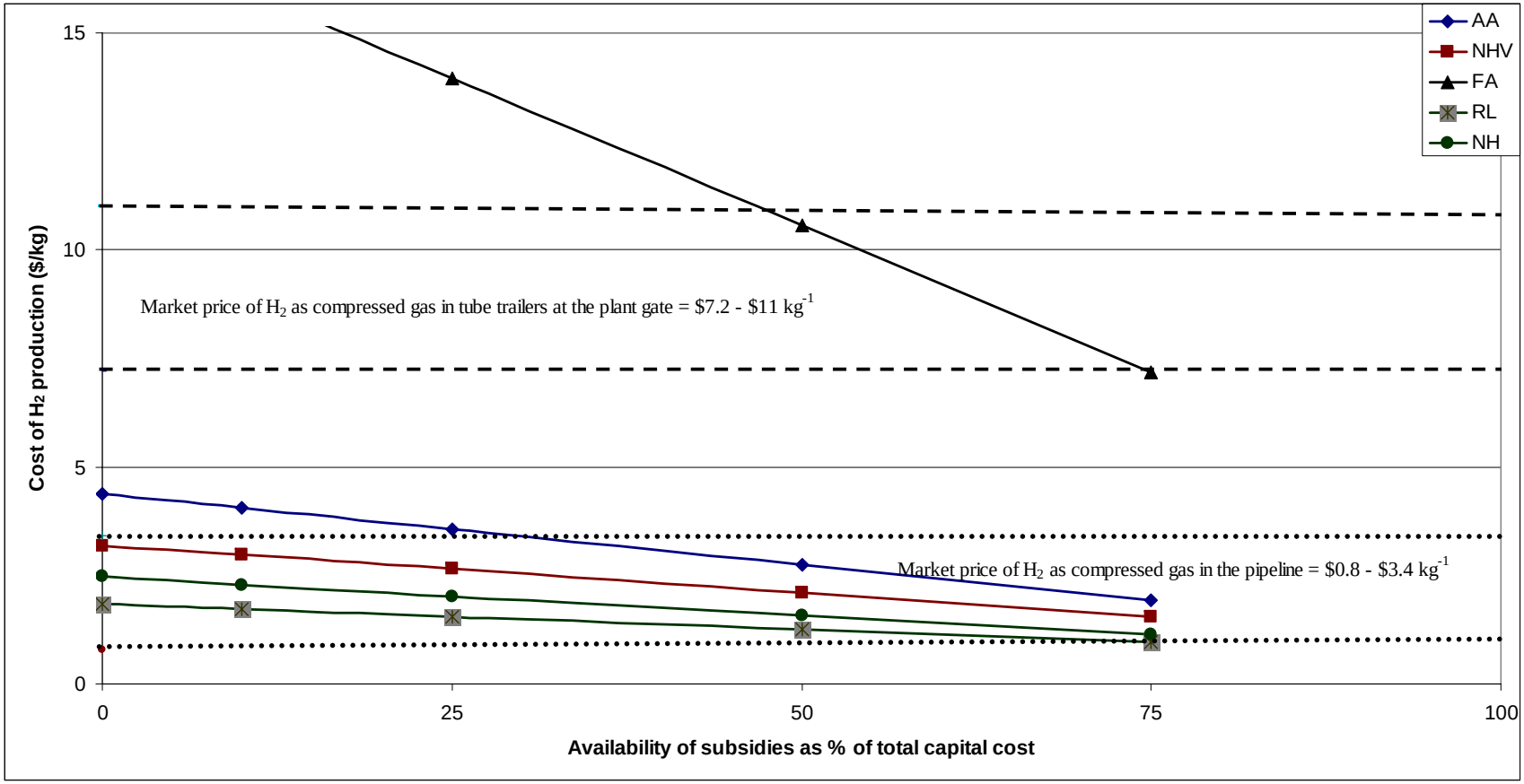

Figure 42. Effect of availability of subsidies as a % of total capital cost on H_2 cost (without CO_2 removal)

The BAU scenario assumes actual biogas production per cow per day on all the five farms studied. However, Gooch et al. (2007) indicate that the total biogas reported as metered (used in this dissertation as biogas production) is not necessarily the total biogas produced at NHV, RL and NH (i.e. the BAU values underestimate the actual production). Hence scenarios with biogas productions of 40 scf cow^{-1} d^{-1} through 100 scf cow^{-1} d^{-1} have also been examined and included for comparison. It is clear from Table 15 that increased biogas production would be beneficial for all farms similarly if the base case of 60 ft^3 cow^{-1} d^{-1}. Eventually increases in biogas production might be technology dependent which in turn would benefit immensely from availability of subsidies, as the results indicate.

Increases in electricity price from $0.09/kWh to $0.15/kWh causes moderate increases in cost of production of hydrogen for AA and NHV whereas RL and NH are more resilient until prices go as high as $0.30/kWh which seems to be unlikely in the near future. Availability of government subsidies of 50% of initial capital costs creates a 30-40% decrease in product cost of hydrogen on all farms. This could trigger a cascade of new innovations and technologies that could emerge in and benefit this field. It is understood and appreciated that support for renewable energy programs will not be and should not be solely dependent on subsidies for capital investment. Policy should try to incorporate industrial ecology and the use of geospatial analysis can aid search for suitable sinks for dairy manure derived hydrogen in upstate New York, either as an industrial chemical or as a carrier of energy, which will indirectly spur economic development in the region.

7.2 Cluster Formation for Efficient Production and Distribution of Renewable Hydrogen

It is clear from Section 6.4 above (Spatial Analysis of Availability of Renewably Produced Hydrogen in the State of New York) that cluster formation with certain criteria and guidelines can aid policymakers and researchers plan large scale statewide renewable hydrogen energy systems. Concepts of cluster formation can also be utilized to address other topics such as help locate best site for hydrogen fuelling stations along major interstate highways. The President's Hydrogen Fuel Initiative and the US Department of Energy's National Hydrogen Energy Roadmap are visions for national energy security (DOE, 2006). An interstate network of hydrogen fueling stations has been proposed based on population densities and traffic volumes, which includes 6 stations in NYS along I-81 and the NYS Thruway (Melendez and Milbrandt, 2005). We have overlaid this info with NYS hydrogen potential in CAFOs and it is clear that clusters of CAFOs can provide hydrogen to these stations with creative science based policies (Figure 43). Though some stations are indeed located close to farm clusters others are not so conveniently located. In the future it is hoped that studies such as this will be consulted so as to include all renewable resources for energy generation.

Economic development is bound to require energy as a prime mover for growth and the provision of clean renewable energy through well planned organic residual management issues can address several issues in one stroke. Most scientists and policymakers alike do not consider the large amount of organic residuals for hydrogen production when referring to bio-hydrogen. The term bio-hydrogen usually refers to hydrogen generated via bacterial means. It would be useful to include calculations of hydrogen from renewable sources such as animal manure while framing policy for clean energy generation and infrastructure development.

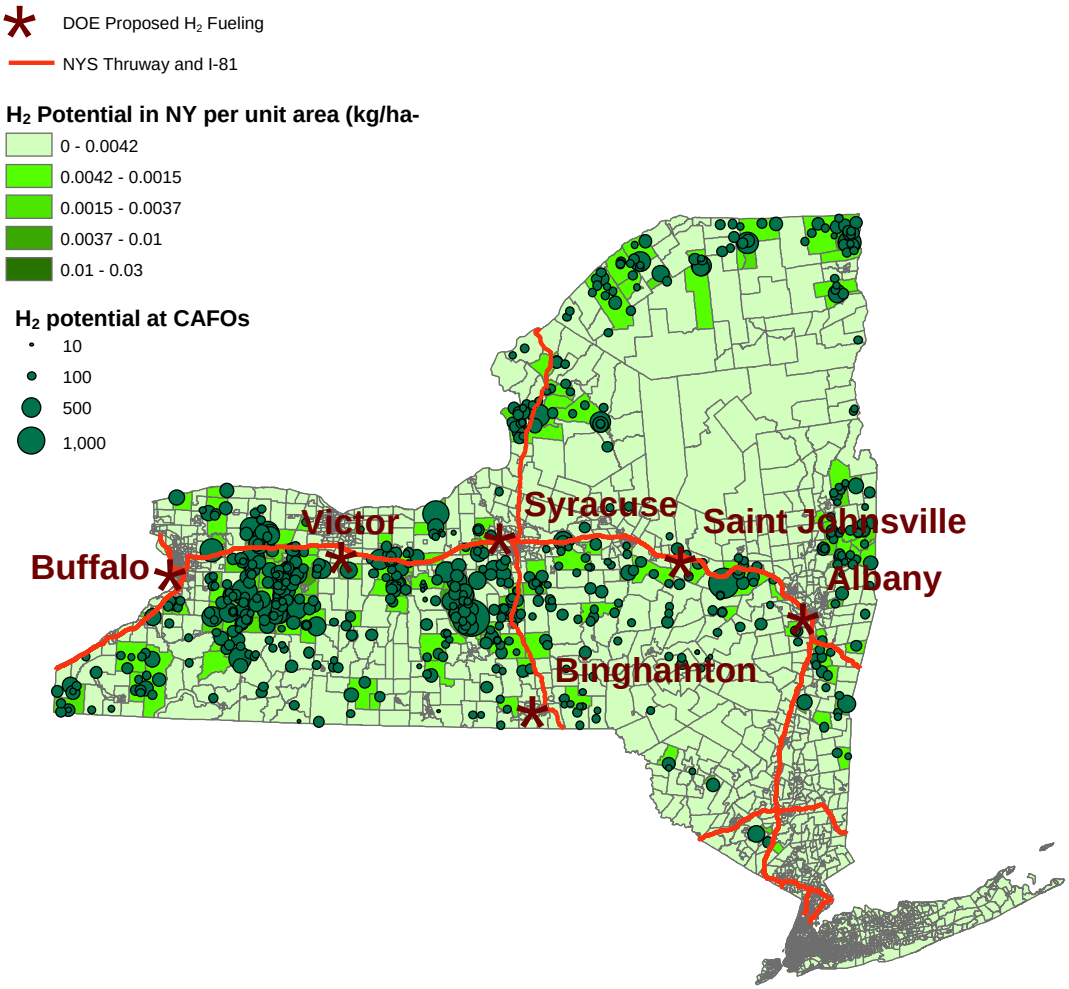

Figure 43. Proposed hydrogen fueling stations along I-90 and I-81

While the proposed stations at Binghamton, St. Johnsville and Albany can benefit by being near some CAFO clusters, the proposed stations at Buffalo and Victor can potentially be relocated eastwards and the Syracuse station could possibly be shifted westwards in order to exploit green hydrogen generation from centralized facilities in these clusters. Cluster formation among farms and cluster-based community owned renewable energy systems also have the potential to strengthen the existing social network among agriculturally based rural people. Network scientists have been studying the implications social networks have, especially for rural

development for many years now. While planning cluster formation, it is important to bear in mind that certain rural areas with strong trust-based linkages are very suitable for 'joint learning' and can serve as sites for technological innovations, other clusters might not be (Murdoch, 2000). Pretty and Ward (2001) show how in the recent decade a large number of groups have evolved with the emergence of social capital being invested in them for joint management of issues ranging from watershed management to microfinancing. They discuss how policies can be formulated to support these groups to spread the innovations. There is no reason why social groups and clusters cannot evolve that address pollution and manure management along with energy production and economic development simultaneously. Farmers' cooperatives which currently exist can be developed and extended into energy cooperatives as well. Advances in geospatial tools and techniques need to be fully tapped for agro based energy planning and it is hoped that this dissertation will serve as an exemplar study in that field.

Cluster formation to handle manure in Wyoming County, which has the one of the highest hydrogen production potential per ha per year can be addressed in a variety of ways. One of the possible combinations is shown in Figure 44 with trucks used for carrying manure in each satellite group (located within the ovals, with the dots representing farm locations and the numbers by the dots representing cow population) to a central location for anaerobic digestion and then transporting cleaned biogas to a central location for processing to hydrogen via pipeline (dotted line). The creative use of GIS and sophisticated tools of operations research can yield optimized solutions addressing a host of interesting issues such as pollution prevention, waste management, industrial ecology etc. These are beyond the scope of the present study.

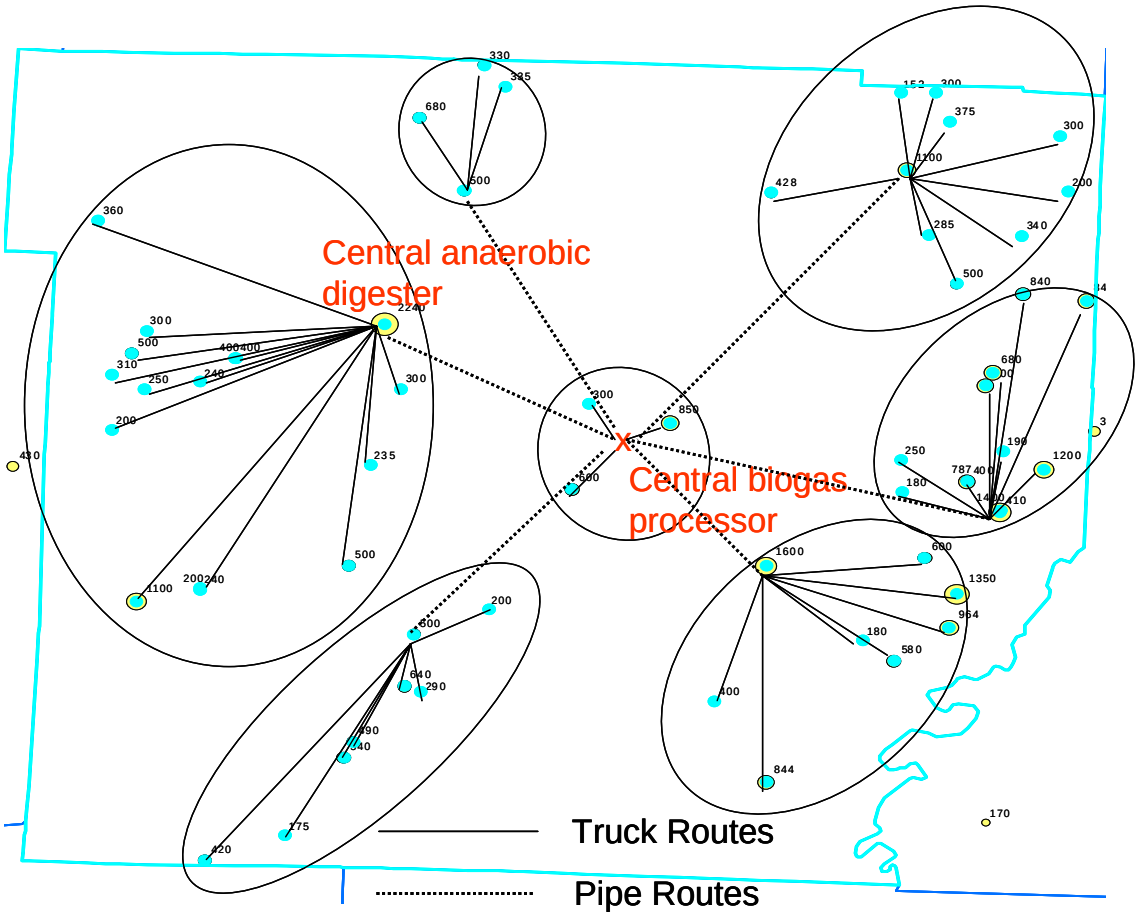

Figure 44. Scheme for central processing of biogas in Wyoming County, NY

Several other combinations are feasible and possible and require knowledge and information about aspects of pipeline installation and legislation, processed biogas injection to the existing natural gas grid and legislation, distance limits for manure and/or gas transport via trucks versus pipeline transport. Each possible candidate for analysis involves additional layers of complexity.

8 CONCLUSIONS

The following conclusions were drawn from this study:

- Hydrogen can be profitably produced from dairy manure-derived biogas on large dairy farms (over 500 cows) in NYS. The co-digestion of food processing waste and other organic material increases biogas production and hydrogen yields. By considering only CAFOs with 500 cows or more and assuming a yield 4 scf CH_4/lb VS destroyed, the total hydrogen production potential from 203 farms was estimated at 6.9 million kg/y, which can contribute to 53% of the State's total annual merchant hydrogen production and represent a revenue stream of $10 – $20 million per year.
- Steam reforming followed by water gas shift reaction accompanied by a membrane reactor to selectively remove product H_2 offers the most profitable pathway to convert biogas to hydrogen. This was due to the market availability of small size reactors suitable for dairy farms at relatively less expensive prices (compared to other reactor configurations) and increased recovery of product hydrogen from the membrane reactor.
- Geospatial analysis of the CAFOs in NYS indicates that there exist clusters of dairy farms that could provide suitable locations for centralized community digesters. These community digesters will be able to increase biogas production by digesting not only animal manure but other types of organic waste as well.
- Dairy-manure derived renewable hydrogen can contribute significantly to a future hydrogen energy economy in NYS. Hydrogen filling stations on future hydrogen highways in NYS as proposed by the DOE can serve as markets for hydrogen generated from clusters of CAFOs, but this concept necessitates the simultaneous evolution and establishment of hydrogen energy infrastructure.

On the other hand, with more investment for hydrogen storage and compression, ultrapure hydrogen produced on CAFOs can be more profitable than the sale of hydrogen as a vehicular fuel if sold in pressurized cylinders or tube trailers as a gas usable for research in scientific institutions and/or as a product that can be sold to industries that need high purity hydrogen for various purposes.

A rigorous economic analysis of five biogas utilization options (namely production of electricity, production of heat, production of pipeline quality substitute natural gas, production of H_2 with CO_2 removal, and production of H_2 without CO_2 removal) was performed on five upstate NY dairy farms (namely AA Dairy in Candor, New Hope View Farm in Homer, J.J., Farber Farm in East Jewett, Ridgeline Farms in Clymer, and Noblehurst Farms, Inc. in Linwood). A financial simulation model was developed and based on the economic analysis the results can be summarized as:

- Complete conversion of biogas to heat by combustion in a boiler is economically and thermodynamically the best utilization option, but on-farm heat needs are low and unless local markets that utilize heat are situated close to or can be attracted in close proximity to the CAFO, this will not be a good route for biogas utilization on a large scale.
- Electricity production has been shown to be profitable only on two farms (AA Dairy and Ridgeline Dairy). The value added to biogas by electricity generation for on-farm needs and sale of excess power to the grid is far less compared to the value addition from hydrogen production due to higher market price for hydrogen.
- Hydrogen can be produced (at an operation such as Ridgeline, where food waste is co-digested with manure) at a cost of $1.95/kg and can yield the best returns on investment as a utilization option for biogas. At the time this study was

conducted the market price of hydrogen was $7.2 - $11 per kg as compressed gas at the place of production and $0.8 - $3.4 per kg as compressed gas in the pipeline (Mann, 2003). Current market price of hydrogen is around $3 - $3.6 per kg (DOE, 2007). Hydrogen production is profitable only if large CAFOs (500 cows or more) have access to food processing waste besides manure for digestion (such as at Ridgeline). This increases revenue through higher biogas yields as well as possible tipping fees paid by the food processors to the CAFOs. If tipping fees are not available, the increased biogas production by the addition of food waste still has the potential to profitably produce hydrogen, but the annual revenue will be lower.

9 DIRECTIONS FOR FUTURE RESEARCH

This research work has focused on animal manure as the main feedstock for the production of green hydrogen. It is well documented that the addition of food processing residuals from large scale food processing facilities as well as food scraps from large kitchens and other sources to livestock manure in anaerobic digesters increases biogas yields. This increase is nonlinear and research is going on currently to determine the best combinations of the best types of food residuals to be digested in combination with manure. Even though data for geospatial coordinates are available for these locations where food residuals can be obtained, there are not clear estimates as to the exact type and amount of organic matter generated in each location. Future research should incorporate the amount and type of organic matter available and include economic analysis of transporting the material to the digester (or examine options to digest the substance on site), evaluate gas production in the laboratory as well as from a demonstration site. Funding is needed to support these projects in the near future.

More simulations are necessary to evaluate and examine the different combinations and mechanisms by which renewable hydrogen can be obtained from organic residuals. Options such as centralized vs. individual digestion and trucking vs. piping of manure should be studied and compared rigorously and in detail. Geospatial information on topography, land use, water availability and soil type inside clusters will help determine if pipes can be laid for either manure or gas transport for centralized applications.

An interesting alternative to centralized digestion that merits serious consideration is individual digestion or smaller scale grouping but centralized reforming of cleaned up biogas, which can be piped to a central location. These and

other variations can be modeled in detail and simulations can be run to determine the best option. Systems modeling can also incorporate factors such as possible premium one might obtain if renewable hydrogen were to be sold as vehicular fuel. Future studies should also incorporate spatial analysis of hydrogen markets. Location of markets will also dictate where centralized facilities will be sited.

APPENDIX A

List of equipment manufacturers

J.W. Stevens Company, Inc
911 North Geddes Street
Syracuse, NY-13204
Tel: 315-472-6311
Contact: Bill Goff

Preferred Utilities Manufacturing Corp.
31-35 South St.
Danbury, CT-06810
Tel: 203-743-6741
Contact: Sal Mola

Superior Fabrication
1703 South Main
Elk City, OK-73644
Tel: 580-243-5693
Contact: Randy Morse

SulfaTreat, A Division of M-I, L.L.C.
17998 Chesterfield Airport Road, Suite 215
Chesterfield, MO-63005
Tel: 800-726-7687
Contact: Duane Taphorn

VanAir Systems
2950 Mechanic St.
Lake City, PA-16423
Tel: 800-840-9906
Contact: Bill Smith

Copeland Corporation
1675 West Campbell Road
P.O. Box 669
Sidney, OH-45365
Tel: 937-498-3560
Contact: Charles Kuhlman

Air Products PRISM Membranes
Tel: 314-995-3353
Contact: Bill Pope

H_2Gen Innovations Inc.,
4740 Eisenhower Avenue
Alexandria, VA-22304
Tel: 703-212-7444
Contact: Sandy Thomas

New Energy Solutions, Inc.
167 Second Street 2nd Floor
Pittsfield, MA 01201
Tel: 413-822-1155
Contact: Val Maston

APPENDIX B

Table 15. Operational US Digesters as of 2005 (Source: EPA, 2006)

Location	Digester Type	Year Operational	Animal Type	Population	Biogas End Use	Operational Output (kW)	Baseline System	Methane Emission Reduction (MT/year)	Equivalent GHG Emission Reduction (MT/yr)
CA	Mesophilic, vertically mixed, plug flow, hard top, concrete tank	2004	Dairy	3510	Electricity	144	Lagoon	984	20664
CA	Ambient temperature covered lagoon	2005	Dairy	237	Electricity	900	Liquid/Slurry Storage	31	651
CA	Ambient temperature covered lagoon	2005	Dairy	175	Electricity	27	Liquid/Slurry Storage	23	483
CA	Ambient temperature covered lagoon	2005	Dairy	5081	Electricity	270	Liquid/Slurry Storage	665	13965
CA	Ambient temperature covered lagoon	NA	Dairy	5081	Electricity	270	Liquid/Slurry Storage	665	13965
CA	Ambient temperature covered lagoon	2005	Dairy	1050	Electricity	108	Liquid/Slurry Storage	137	2877
CA	Ambient temperature covered lagoon	2005	Dairy	6000	Electricity	225	Liquid/Slurry Storage	785	16485

CA	Plug Flow	2005	Dairy	4700	Electricity	506	Liquid/Slurry Storage	615	12915
CA	Plug Flow	2005	Dairy	NA	Electricity	1350	Liquid/Slurry Storage	N/A	N/A
CA	Mesophilic, flexible top, plug flow, concrete tank	2003	Dairy	1500	Electricity	234	Liquid/Slurry Storage	196	4116
CA	Mesophilic, flexible top, plug flow, concrete tank	1982	Dairy	400	Electricity; hot water	36	Liquid/Slurry Storage	52	1092
CA	Ambient temperature covered lagoon	2005	Dairy	1258	Electricity	135	Liquid/Slurry Storage	165	3465
CA	Mesophilic, flexible top, plug flow, concrete tank	2003	Dairy	1900	Electricity	144	Liquid/Slurry Storage	249	5229
CA	Mesophilic, flexible top, complete mix, concrete tank	2001	Dairy	5000	Electricity; hot water	270	Liquid/Slurry Storage	654	13734
CA	Mesophilic, hard top, plug flow, concrete tank	2002	Dairy	7000	Electricity	270	Liquid/Slurry Storage	916	19236
CA	Ambient temperature covered lagoon	1982	Swine	1650	Electricity; hot air	45	Lagoon	58	1218
CA	Ambient temperature covered lagoon	2000	Dairy	200	N/A	22	Liquid/Slurry Storage	26	546

CA	Plug Flow	2005	Dairy	600	Electricity	117	Liquid/Slurry Storage	78	1638
CO	Mesophilic, flexible top, complete mix, concrete tank	1999	Swine	5000	Electricity	63	Lagoon	157	3297
CT	Mesophilic, hard top, complete mix, above-ground metal tank	1997	Dairy	600	Electricity	72	Liquid/Slurry Storage	53	1113
CT	Mesophilic, flexible top, plug flow, concrete tank	1997	Dairy	200	Hot water; flare	18	Liquid/Slurry Storage	18	378
FL	Attached media, hard top, aboveground	1999	Dairy	250	Hot water; flare	27	Liquid/Slurry Storage	46	966
ID	N/A	N/A	Dairy	3000	Electricity	N/A	Lagoon	287	6027
IA	Ambient temperature covered lagoon	1998	Swine	3000	Flare	0	Lagoon	76	1596
IA	Mesophilic, hard top, plug flow, concrete tank	2002	Dairy	380	Electricity; heat	45	Liquid/Slurry Storage	34	714
IA	Mesophilic, hard top, plug flow, concrete tank	2004	Dairy	1000	Electricity; hot water	90	Liquid/Slurry Storage	88	1848
IA	Mesophilic, flexible top, complete mix, concrete tank	1998	Swine	5000	Electricity	54	Lagoon	166	3486

IA	Mesophilic, hard top, plug flow, combined phase, concrete tank	N/A	Dairy	700	Electricity	126	Liquid/Slurry Storage	62	1302
IL	Mesophilic, heated lagoon, combined phase	1998	Swine	8300	Hot water; flare	36	Lagoon	285	5985
IL	Plug flow	2005	Dairy	1100	Electricity	126	Liquid/Slurry Storage	111	2331
IL	Mesophilic, flexible top, plug flow, combined phase, concrete tank	2002	Dairy	1400	Electricity	162	Liquid/Slurry Storage	141	2961
IN	Mesophilic, hard top, plug flow, concrete tank	2002	Dairy	3500	Electricity	360	Liquid/Slurry Storage	343	7203
MD	Mesophilic, hard top, complete mix, vertical pour, concrete tank	1994	Dairy	120	Flare	14	Liquid/Slurry Storage	12	252
MI	Plug flow, inground tank	1981	Dairy	720	Electricity	0	Liquid/Slurry Storage	57	1197
MN	Mesophilic, flexible top, plug flow, combined phase, concrete tank	1999	Dairy	1000	Electricity; hot water	99	Liquid/Slurry Storage	81	1701
MN	Plug flow	N/A	Dairy	3000	Electricity	N/A	Liquid/Slurry Storage	242	5082

MS	Ambient temperature covered lagoon	1998	Swine	145	Flare	4	Lagoon	5	105
NC	Ambient temperature covered lagoon	1997	Swine	4000	Electricity; hot water	108	Lagoon	140	2940
NC	Mesophilic, covered lagoon, mix digestive	2003	Swine	10000	Electricity	135	Lagoon	350	7350
NY	Mesophilic, flexible top, concrete tank, plug flow	1998	Dairy	550	Electricity	117	Liquid/Slurry Storage	44	924
NY	Mesophilic, hard top, complete mix, metal above ground tank	1985	Dairy	270	Cogeneration	58	Liquid/Slurry Storage	22	462
NY	Hard top	N/A	Dairy	NA	N/A	N/A	Liquid/Slurry Storage	N/A	N/A
NY	Mesophilic, flexible top, plug flow, concrete tank	2001	Dairy	850	Hot water	68	Liquid/Slurry Storage	68	1428
NY	Mesophilic, flexible top, complete mix, concrete inground tank	2001	Dairy	750	Electricity; hot water	122	Liquid/Slurry Storage	60	1260
NY	Plug flow	N/A	Dairy	185	Flare	0	Liquid/Slurry Storage	15	315
NY	Mesophilic, hard top, plug flow, concrete inground tank	2003	Dairy	1300	Electricity	117	Liquid/Slurry Storage	104	2184

NY	Mesophilic, hard top, plug flow, concrete tank	N/A	Dairy/swine	2080	Electricity	117	Liquid/Slurry Storage	167	3507
OR	Mesophilic, hard top, complete mix, above ground	2001	Dairy	325	Electricity	32	Liquid/Slurry Storage	30	630
OR	Mesophilic, flexible top, plug flow, concrete tank	2003	Dairy	2000	Electricity	225	Liquid/Slurry Storage	183	3843
OR	Mesophilic, flexible top, plug flow, concrete tank	2004	Dairy/poultry	2000	Electricity	270	Liquid/Slurry Storage	183	3843
PA	Mesophilic, flexible cover tank, plug flow, complete mix, slurry loop	1983	Layer; 350,000	350000	Electricity; hot water	135	N/A	263	5523
PA	Mesophilic, hardtop, complete mix, slurry loop, concrete tanks	1983	Layer; 75,000	75000	Electricity	58	Liquid/Slurry Storage	56	1176
PA	N/A	N/A	Swine	1200	Electricity	90	Lagoon	40	840
PA	Mesophilic, hard top, plug flow, complete mix, slurry loop, concrete tank	1979-1984	Dairy	2300	Electricity; hot water	225	Liquid/Slurry Storage	215	4515
PA	Mesophilic, hard top, plug flow, complete mix, slurry loop, concrete tank	1983	Dairy	250	Electricity	22	Liquid/Slurry Storage	15	315

PA	N/A	2004	Swine	4400	Electricity	117	Lagoon	148	3108
PA	Mesophilic, flexible top, plug flow, complete mix, concrete tank	1985	Swine	750	Electricity; hot water	180	Lagoon	25	525
TX	Mesophilic, plug flow, hard and flexible covers, lagoon	1989	Dairy	400	Electricity	54	Liquid/Slurry Storage	57	1197
TX	Mesophilic, mixed covered lagoon	2003	Swine	108000	Electricity	1800	Lagoon	3883	81543
TX	Mesophilic, mixed covered lagoon	2003	Swine	10000	Electricity	144	Lagoon	360	7560
UT	Mesophilic covered lagoon	2005	Swine	144000	N/A	N/A	Lagoon	3750	78750
VA	Ambient temperature covered lagoon	1984	Swine	3000	Electricity	0	Lagoon	41	861
VT	Mesophilic, flexible top, plug flow, concrete tank	1982	Dairy	340	Electricity; hot water; steam	76	Liquid/Slurry Storage	24	504
WA	Plug Flow	2005	Dairy	1500	Electricity	259	Liquid/Slurry Storage	418	8778
WI	Mesophilic, hard cover, modified plug flow, concrete tank	2001-2	Dairy	730	Electricity; heat	200	Liquid/Slurry Storage	107	2247

WI	Mesophilic, flexible cover, plug flow, concrete tank	2001-2	Dairy	1200	Electricity; heat	140	Liquid/Slurry Storage	176	3696
WI	Mesophilic, hard cover, modified plug flow, concrete tank	2001	Dairy	24003	Electricity; heat	375	Liquid/Slurry Storage	351	7371
WI	Mesophilic, hard top, modified plug flow, concrete tank	2004	Dairy	3000	Electricity; heat	700	Liquid/Slurry Storage	439	9219
WI	Mesophilic, hard top, modified plug flow, concrete tank	1998	Dairy	1100	Heat	N/A	Liquid/Slurry Storage	161	3381
WI	Mesophilic, hard top, modified plug flow, concrete tank	1999	Dairy	1600	Heat	N/A	Liquid/Slurry Storage	234	4914
WI	Mesophilic, hard top, modified plug flow, concrete tank	2001	Dairy	875	Electricity; heat	135	Liquid/Slurry Storage	128	2688
WI	Mesophilic, flexible top, complete mix, concrete tank	2004	Dairy	1350	Electricity; heat	350	Liquid/Slurry Storage	197	4137
WI	Mesophilic, hard top, modified plug flow, concrete tank	2005	Dairy	1200	Electricity; heat	200	Liquid/Slurry Storage	176	3696
WI	Thermophilic with codigestion, hard top, complete mix, steel tank	2005	Dairy	1000	Electricity; heat	775	Liquid/Slurry Storage	146	3066
WI	Thermophilic with codigestion, hard top, complete mix, steel tank	2004	Dairy	1000	Electricity, heat	775	Liquid/Slurry Storage	146	3066

WI	Mesophilic, hard top, modified plug flow, concrete tank	1988	Duck	500000	Electricity; heat	200	Liquid/Slurry Storage	603	12663
WI	Thermophilic with codigestion, hard top, complete mix, steel tank	2005	Dairy	1300	Electricity; heat	775	Liquid/Slurry Storage	190	3990
WI	Mesophilic, hard top, complete mix, stainless steel tank	2006	Dairy	1000	Electricity; heat	250	Liquid/Slurry Storage	146	3066
WI	Mesophilic, flexible top, complete mix, concrete tank	2006	Dairy	2500	Electricity; heat	500	Liquid/Slurry Storage	366	7686
WI	Complete mix	2005	Dairy	1000	N/A	225	Liquid/Slurry Storage	79	1659
WY	Mesophilic, complete mix	N/A	Swine	5000	Electricity	N/A	Lagoon	10	210
WY	Mesophilic, complete mix	N/A	Swine	15000	Electricity	N/A	Lagoon	458	9618

APPENDIX C

Table 16. US Digesters in start-up/construction stage as of 2005 (Source: EPA, 2006)

Location	Digester Type	Animal Type	Population	Biogas End Use	Operational Output (kW)	Baseline System	Methane Emission Reduction (MT/year)	Equivalent GHG Emission Reduction (MT/year)
IL	Plug flow	Dairy	1000	Electricity	N/A	Liquid/Slurry Storage	101	2121
IN	Plug flow	Dairy	3200	Electricity	N/A	Liquid/Slurry Storage	314	6594
NE	Complete mix	Swine	6000	Electricity	144	Liquid/Slurry Storage	82	1722
NY	Complete mix	Duck		Electricity	N/A	Liquid/Slurry Storage	N/A	N/A
NY	Plug flow	Dairy	170	Electricity	22	Liquid/Slurry Storage	14	294
NY	Plug flow	Dairy	700	Electricity	63	Liquid/Slurry Storage	56	1176
NY	Plug flow	Dairy		Electricity	N/A	Liquid/Slurry Storage	N/A	N/A

NY	Complete mix	Dairy	1800	Electricity	234	Liquid/Slurry Storage	144	3024
PA	Plug flow	Dairy	700	Electricity	72	Liquid/Slurry Storage	65	1365
PA	Plug flow	Dairy	400	Electricity	45	Liquid/Slurry Storage	37	777
PA	Plug flow	Dairy	400	Electricity	45	Liquid/Slurry Storage	37	777
PA	Plug flow	Dairy	600	Electricity	36	Liquid/Slurry Storage	56	1176
VT	Two-stage mixed	Dairy	1200	flare; cogeneration	216	Lagoon	254	5334
WI	Mesophilic, hard top, modified plug flow, concrete tank	Dairy	3000	Electricity, heat	1200	Liquid/Slurry Storage	230	4830
WI	Mesophilic, hard top, modified plug flow, concrete tank	Dairy	3000	Electricity, heat	600	Liquid/Slurry Storage	230	4830
WI	Mesophilic, hard top, modified plug flow, concrete tank	Dairy	800	Electricity, heat	150	Liquid/Slurry Storage	62	1302
WI	Mesophilic, hard top, modified plug flow, concrete tank	Dairy	1050	Electricity, heat	200	Liquid/Slurry Storage	80	1680

WI	Mesophilic, hard top, modified plug flow, concrete tank	Dairy	3000	Electricity, heat	300	Liquid/Slurry Storage	230	4830
WI	Mesophilic, flexible top, complete mix, concrete tank	Dairy	2500	Electricity, heat	500	Liquid/Slurry Storage	191	4011

APPENDIX D

Characteristics of Five Upstate NY Dairy Farms

Table 17. Average Daily Head Count in Farms by Month (Source: Gooch et al., 2007)

	AA	**NHV**	**FA**	**RL**	**NH**
Jan-04	573	991	105	511	1,303
Feb-04	578	991	105	497	1,226
Mar-04	560	922	103	497	1,179
Apr-04	545	981	104	516	1,186
May-04	539	972	104	499	1,180
Jun-04	528	970	104	499	1,421
Jul-04	519	970	113	543	1,431
Aug-04	519	947	113	505	1,454
Sep-04	525	960	114	505	1,484
Oct-04	522	952	117	571	1,492
Nov-04	514	956	111	521	1,493
Dec-04	512	949	110	521	1,499
Jan-05	512	959	113	571	1,516
Feb-05	513	952	110	540	1,506
Mar-05	510	957	106	540	1,493
Apr-05	511	967	105	575	1,481
May-05	515	957	107	556	1,526
Ave	**529**	**962**	**108**	**527**	**1,404**

Table 18. Summary of Farm Characteristics (Source: Gooch et al., 2007)

	AA	**NHV**	**FA**	**RL**	**NH**
Herd size	529	962	108	527	1404
Digester type	Plug flow	Plug flow	Vertical plug flow	Mixed	Plug Flow (two parallel cells)
Influent:	Raw manure	Raw manure	Separated liquid manure	Raw manure + food waste[c]	Raw manure
Stall bedding material:	Sawdust	Sawdust	Sawdust and paper waste	Sawdust, digested separated manure solids, and coco shells	Sawdust and digested separated manure solids
Digester construction material:	Cast-in-place concrete	Cast-in-place concrete	Precast concrete	Cast-in-place concrete	Cast-in-place concrete
Cover material	Soft top (Hypalon 45)	Soft top (Hypalon 45)	Hard top (precast concrete)	Soft top (Hypalon 45)	Hard top (Pre-cast and cast-in-place concrete)
Insulation	4” Styrofoam on walls	4” Styrofoam on walls	4” styrofoam below grade, 4” urethane above grade, 2” Styrofoam on 80% of top	4” Styrofoam on walls	4” Styrofoam on walls and floor

Dimensions (ft) (W,L,H):	30, 130, 14	30, 118, 19	10.5 dia, 16 H	68, 78, 16	50, 120, 16 (each cell is 25 ft. wide)
Design temperature (°F):	100°F	100°F	100°F	100°F	100°F
Manure depth (ft):	14	19	12	16	15
Estimated total loading rate (gpd):	11000	25000	1733-1950[a]; 959-1537[b]	25000	18000
Treatment Volume (gallons):	408,436	503,139	7,768	634,826	673,246
Estimated hydraulic retention time (d):	37	20	4.8[a]; 8.1[b]	20	37
Biogas utilization:	Caterpillar engine with 130 kW generator	Biogas boiler, Microturbine (70 kW)	Biogas boiler	Biogas boiler, Waukesha engine with 130 kW generator	Caterpillar engine with 130 kW generator

a – For the period June 2 2002 through Apr 25 2003 when the digester was performing as a fixed-film digester

b – For the period after Aug 21 2003 when the digester was performing as a vertical plug-flow digester. In both cases raw manure was pretreated to separate solids and liquids and only liquids are digested.

c – Food waste includes by-products from milk, grapes and fish processing

Table 19. Average monthly metered biogas (ft^3) for all farms Jan 2004 to May 2005 (Source: Gooch et al., 2007)

	AA	**NHV**	**FA**	**RL**	**NH**
Jan-04	1,310,900	1,139,100	27,145	2,248,604	
Feb-04	1,361,700	1,115,700	14,948	2,083,013	
Mar-04	846,500	883,900	36,855	2,333,516	
Apr-04	1,455,100	937,800	37,999	2,309,184	1,623,683
May-04		581,500	61,789	2,381,176	1,965,919
Jun-04		710,700	26,573	2,521,927	1,592,215
Jul-04		589,900	22,673	2,366,446	415,500
Aug-04	856,600	577,600	54,922	2,504,337	1,437,838
Sep-04	1,363,000	653,379	13,647	2,031,481	518,500
Oct-04	1,264,100	1,132,400	19,400	2,756,856	1,898,735
Nov-04	701,000	912,300	54,354	2,176,922	1,995,126
Dec-04	884,400	1,242,700	52,010	2,416,991	1,196,800
Jan-05	396,700	134,000	44,183	6,517,740	1,619,800
Feb-05		134,050	26,256	6,384,959	1,546,200
Mar-05	872,300	3,101	61,829	9,383,185	1,533,003
Apr-05	1,029,800	350,000	63,696	8,605,361	1,714,197
May-05	1,198,500	350,000	70,183	8,373,584	1,561,994
Average	1,041,585	673,419	40,498	3,964,428	1,472,822
Std. dev.	313,727	386,110	18,717	2,676,995	475,334

APPENDIX E

Economic Analysis of Biogas Utilization Options at AA Dairy

Option 1: Business as Usual (BAU): electricity production at AA

Table 20. Cost of producing electricity at AA Dairy: BAU

Component				
Digester	**Cost ($)**	**Life (y)**	**LCF**	**LAC**
Manure pump	9,000	5	0.26	2,374
Engineering design	20,000	10	0.16	3,255
Concrete digester (incl floating insulation, gas containing cover, 2 hot water heating circuits)	160,000	10	0.12	26,039
Subtotal	**189,000**			**23,517**
Solids separation				
Effluent pump (7.5 Hp) var speed drive	3,000	5	0.26	791
Separation eqpt	25,000	10	0.16	4,069
Bldg for sep eqpt	25,000	10	0.16	4,069
Subtotal	**53,000**			**8,929**
Total Digester capital costs	**242,000**			**40,597**
Energy conversion				
Engine generator (used) and switching equipment	15,000	10	0.16	2,441
Engine rebuilding	2,000	10	0.16	325
Generator rebuilding	9,000	10	0.16	1,465
Plumbing, elec and mech systems	9,000	10	0.16	1,465
Cable to utility hook-up	8,000	10	0.16	1,302
Electrical engineering consultant	18,000	10	0.16	2,929
Subtotal	**61,000**			**9,927**
Total	**303,000**			**50,524**

Total LAC = $50,524/y; AOM = $12,000; Benefits = $14,600/y

Annual project cost = $50,524/y + $12,000/y – $14,600/y = $47,924/y

Electrical energy produced: 70 kW = 551,880 kWh/y (assuming 90% generator run-time)

Cost of electricity production = $47,924/551,880 kWh = $0.09/kWh = ¢8.68/kWh

Option 2a: Production of heat at AA Dairy (high initial investment)

Table 21. Cost of producing heat at AA Dairy (high initial investment)

Component				
Digester	**Cost ($)**	**Life (y)**	**LCF**	**LAC**
Manure pump	9,000	5	0.26	2,374
Engineering design	20,000	10	0.16	3,255
Concrete digester (incl floating insulation, gas containing cover, 2 hot water heating circuits)	160,000	10	0.16	26,039
Subtotal	**189,000**			**31,668**
Solids separation				
Effluent pump (7.5 Hp) var speed drive	3,000	5	0.26	791
Separation eqpt	25,000	10	0.12	4,069
Bldg for sep eqpt	25,000	10	0.12	4,069
Subtotal	**53,000**			**8,929**
Boiler and piping				
Boiler (J.W. Stevens, Syracuse, NY)	13,000	15	0.13	1,709
Boiler installation (local installer from around Candor, NY)	13,000	15	0.13	1,709
Piping	15,000	15	0.13	1,972
Biogas booster with special seal (Preferred Utilities, Danbury, CT)	59,963	10	0.16	9,759
Subtotal	**100,963**			**15,149**
Total	**342,963**			**55,746**

Total LAC = $55,746/y; AOM = $5,000; Benefits = $14,600/y

Farm electricity needs = 413,869 kWh/y

Additional electricity costs = (413,869 kWh/y) * $ 0.09/kWh = $37,248/y

Annual project cost = $55,746/y + $5,000 + $37,248/y – $14,600/y = $83,394/y

Thermal energy available by combusting all biogas = 7,680 MM BTU/y
(assuming boiler run-time of 90%, boiler efficiency = 0.85, herd size = 529 cows, 80 ft^3 biogas production cow^{-1} d^{-1}, calorific value of 650 btu/scf)

Cost of heat production (high initial investment) at AA = $10.85/MM BTU

Option 2b: Production of heat at AA Dairy (low initial investment)

Table 22. Cost of producing heat at AA Dairy (low initial investment)

Component				
Digester	**Cost ($)**	**Life (y)**	**LCF**	**LAC**
Manure pump	9,000	5	0.26	2,374
Engineering design	20,000	10	0.16	3,255
Concrete digester (incl floating insulation, gas containing cover, 2 hot water heating circuits)	160,000	10	0.16	26,039
Subtotal	**189,000**			**31,668**
Solids separation				
Effluent pump (7.5 Hp) var speed drive	3,000	5	0.26	791
Separation eqpt	25,000	10	0.12	4,069
Bldg for sep eqpt	25,000	10	0.12	4,069
Subtotal	**53,000**			**8,929**
Boiler and piping				
Boiler (durable components) (J.W. Stevens, Syracuse, NY)	6,000	15	0.13	789
Boiler parts that need replacement	7,000	6	0.23	1,607
Boiler installation (local installer from around Candor, NY)	13,000	15	0.23	2,985
Piping	15,000	15	0.13	1,972
Subtotal	**41,000**			**7,353**
Total	**283,000**			**47,950**

Total LAC = $47,950/y; AOM = $5,000; Benefits = $14,600/y

Farm electricity needs = 413,869 kWh/y

Additional electricity costs = (413,869 kWh/y) * $ 0.09/kWh = $37,248/y

Annual project cost = $47,950/y + $5,000 + $37,248/y – $14,600/y = $75,598/y

Thermal energy available by combusting all biogas = 7,680 MM BTU/y
(assuming boiler run-time of 90%, boiler efficiency = 0.85, herd size = 529 cows, 80 ft^3 biogas production cow^{-1} d^{-1}, calorific value of 650 btu/scf)

Cost of heat production (low initial investment) at AA = $9.84/MM BTU

Option 3: Production of pipeline quality substitute natural gas at AA Dairy

Table 23. Cost of producing pipeline quality substitute natural gas at AA Dairy

Component				
Digester	**Cost ($)**	**Life (y)**	**LCF**	**LAC**
Manure pump	9,000	5	0.26	2,374
Engineering design	20,000	10	0.16	3,255
Concrete digester (incl floating insulation, gas containing cover, 2 hot water heating circuits)	160,000	10	0.16	26,039
Subtotal	**189,000**			**31,668**
Solids separation				
Effluent pump (7.5 Hp) var speed drive	3,000	5	0.26	791
Separation eqpt	25,000	10	0.16	4,069
Bldg for sep eqpt	25,000	10	0.16	4,069
Subtotal	**53,000**			**8,929**
Additional components for gas quality enhancement				
Separator (to remove liquid water droplets) (Superior Fabrication, Elk City, OK)	4,700	10	0.16	765
Holding Vessel (Superior Fabrication, Elk City, OK)	20,000	10	0.16	3,255
H_2S Scrubber (SulfaTreat, Chesterfield, MO)	25,200	1	1.10	27,720
Dryer (VanAir Systems, Lake City, PA)	1,000	1	1.10	1,100
Compressor (Copeland Corp, Sidney, OH)	30,000	20	0.12	3,524
2 Filters (unknown)	1,500	1	1.10	1,650
Heat exchanger (unknown)	5,000	10	0.16	814
Membranes (Air Products, Columbia, MO)	10,000	5	0.26	2,638
Membrane system (Air Products, Columbia, MO)	100,000	20	0.12	11,746
Subtotal	**197,400**			**53,211**
Total	**439,400**			**93,808**

Total LAC = $93,808/y; AOM = $15,000; Benefits = $14,600/y
Farm electricity needs = 413,869 kWh/y

Additional electricity needs for 18 HP CO_2 compressor = 117,472 kWh/y

(Assuming a conversion rate of 0.745 kWh/HP-h)

Additional electricity costs = (413,869 kWh/y + 117,472 kWh/y) * $ 0.09/kWh = $47,821/y

Annual project cost = $93,808/y + $15,000 + $47,821/y – $14,600/y = $142,029/y

Net biogas production (scf/y) = 12,499,015 scf/y

Calorific value of heat obtainable annually from biogas upgrading = 5,751 MM BTU

(Assuming calorific value of CH_4 = 1000 btu/scf; CH_4 recovery from membrane = 0.852; CH_4 content in biogas = 0.6; run time of equipment = 0.9)

Cost of producing pipeline quality substitute natural gas at AA Dairy = $24.70/MM BTU

Note that the above cost doesn't include either pipeline construction/installation costs or costs associated with trench excavation and backfilling into consideration. By including these costs, the cost of producing pipeline quality substitute natural gas at AA Dairy can be calculated as follows:

Total costs for pipeline construction/installation = $205,920

Total costs for trench excavation = $49,280

Total costs for backfilling = $8,848

Assuming a lifetime of 20 years (LAF = 0.13) for the above costs, the additional LAC that this would represent is calculated to be $34,715.

Annual project cost = $142,029/y + $34,715/y = $176,744/y

Calorific value of heat obtainable annually from biogas upgrading = 5,751 MM BTU

Cost of producing pipeline quality substitute natural gas at AA Dairy (including pipeline costs) = $30.73/MM BTU

Option 4: Production of H_2 at AA Dairy (with CO_2 removal)

Table 24. Cost of producing H_2 (with CO_2 removal) at AA Dairy

Component				
	Cost ($)	**Life (y)**	**LCF**	**LAC**
Digester				
Manure pump	9,000	5	0.26	2,374
Engineering design	20,000	10	0.16	3,255
Concrete digester (incl floating insulation, gas containing cover, 2 hot water heating circuits)	160,000	10	0.16	26,039
Subtotal	**189,000**			**31,668**
Solids separation				
Effluent pump (7.5 Hp) var speed drive	3,000	5	0.26	791
Separation eqpt	25,000	10	0.16	4,069
Bldg for sep eqpt	25,000	10	0.16	4,069
Subtotal	**53,000**			**8,929**
Additional components for gas quality enhancement				
Separator (to remove liquid water droplets) (Superior Fabrication, Elk City, OK)	4,700	10	0.16	765
Holding Vessel (Superior Fabrication, Elk City, OK)	20,000	10	0.16	3,255
H_2S Scrubber (SulfaTreat, Chesterfield, MO)	25,200	1	1.10	27,720
Dryer (VanAir Systems, Lake City, PA)	1,000	1	1.10	1,100
Compressor (Copeland Corp, Sidney, OH)	30,000	20	0.12	3,524
2 Filters (unknown)	1,500	1	1.10	1,650
Heat exchanger (unknown)	5,000	10	0.16	814
Membranes (Air Products, Columbia, MO)	10,000	5	0.26	2,638
Membrane system (Air Products, Columbia, MO)	100,000	20	0.12	11,746
Pressure regulator (unknown)	5,000	20	0.12	587
Reformer (H_2Gen, Alexandria, VA)	280,000	15	0.13	36,813
Subtotal	**482,400**			**90,611**
Total	**724,400**			**131,208**

Total LAC = $131,208/y; AOM = $18,000; Benefits = $14,600/y
Farm electricity needs = 413,869 kWh/y

Additional electricity needs for 18 HP CO_2 compressor = 117,472 kWh/y

(Assuming a conversion rate of 0.745 kWh/HP-h)

Additional electricity costs = (413,869 kWh/y + 117,472 kWh/y) * $ 0.09/kWh = $47,821/y

Annual Project Cost = $131,208/y + $18,000 + $47,821/y – $14,600/y = $182,429/y

Net biogas production (scf/y) = 12,499,015 scf/y

According to the reformer manufacturer's specifications, 2,000 scf/h of H_2 is produced for an input of 1,500 scf/h natural gas.

Amount of substitute natural gas obtainable (scf/h) = 656 scf/h

(Assuming CH_4 recovery from membrane = 0.852; CH_4 content in biogas = 0.6; run time of gas upgrade equipment = 0.9)

Amount of H_2 obtainable (scf/y) = 7,773,888 scf/y = 18,113 kg/y

Cost of producing ultrapure H_2 at AA Dairy = $10.07/kg

Option 5: Production of H_2 at AA Dairy (without CO_2 removal)

Table 25. Cost of producing H_2 (without CO_2 removal) at AA Dairy

Component				
	Cost ($)	**Life (y)**	**LCF**	**LAC**
Digester				
Manure pump	9,000	5	0.26	2,374
Engineering design	20,000	10	0.16	3,255
Concrete digester (incl floating insulation, gas containing cover, 2 hot water heating circuits)	160,000	10	0.16	26,039
Subtotal	**189,000**			**31,668**
Solids separation				
Effluent pump (7.5 Hp) var speed drive	3,000	5	0.26	791
Separation eqpt	25,000	10	0.16	4,069
Bldg for sep eqpt	25,000	10	0.16	4,069
Subtotal	**53,000**			**8,929**
Additional components for gas quality enhancement				
Base hydrogen plant (Harvest Energy Technology, CA)	365,000	10	0.16	59,402
HTS/MR (REB Research, MI)	220,000	10	0.16	35,804
GPU (New Energy Solutions Inc., MA)	75,000	10	0.16	12,206
Compressor (New Energy Solutions Inc., MA)	40,000	10	0.16	6,510
Subtotal	**700,000**			**113,922**
Total	**942,000**			**154,519**

Total LAC = $154,519/y; AOM = $18,000; Benefits = $14,600/y
Farm electricity needs = 413,869 kWh/y

Additional electricity needs for 18 HP CO_2 compressor = 117,472 kWh/y

(Assuming a conversion rate of 0.745 kWh/HP-h)

Additional electricity costs = (413,869 kWh/y + 117,472 kWh/y) * $ 0.09/kWh = $47,821/y

Annual Project Cost = $154,519/y + $18,000 + $47,821/y – $14,600/y = $205,739/y

Net biogas production (scf/y) = 12,499,015 scf/y

Amount of CH_4 obtainable (scf/h) = 856 scf/h

According to the steam reformer manufacturer (Harvest Energy Technology, CA) 370 scfh CH_4 will yield 50 kg/d H_2 (Warren, 2004)

Amount of H_2 obtainable (kg/y) = 38,004 kg/y

(Assuming CH_4 content in biogas = 0.6; run time of steam reformer = 0.9)

Cost of producing ultrapure H_2 at AA Dairy = $5.41/kg

APPENDIX F

Economic Analysis of Biogas Utilization Options at NHV

Option 1: Business as Usual (BAU): electricity and heat production at NHV

Table 26. Cost of producing electricity at NHV: BAU

	Cost ($)	**Life (y)**	**LCF**	**LAC**
Digester	**350,000**	10	0.16	**56,961**
Solids and Liquids Separation				
Separator	46,613	10	0.16	**7,586**
Separator Building	42,387	10	0.16	**6,898**
Subtotal	**89,000**			**14,484**
Others	**43,800**	10	0.16	**7,128**
Total digester capital costs	**482,800**			**78,573**
Electrical and Heating Systems				
Microturbines	136,000	15	0.13	**17,880**
Boiler and Piping	50,000	15	0.13	**6,574**
Subtotal	**186,000**			**24,454**
Total project Cost	**668,800**			**103,028**

Total LAC = $103,028/y; AOM = $12,000; Benefits = $12,000/y

Annual project cost = $103,028/y + $12,000/y – $12,000/y = $103,028/y

Electrical Energy Produced: 70 kW = 551,880 kWh/y

(assuming 90% run-time of microturbines)

Of the total LAC, it is assumed that LAC for heat production and LAC for electricity production are in the same ratio as the energy benefits derived from both of them. It is assumed that the heat production is 430 MM BTU at NHV (since no exact data was available, this was a reasonable assumption to make since the heat savings reported match this usage). Using a conversion factor of 293.07 kWh per MM BTU, we can calculate thermal energy equivalent of 551,880 kWh/y to be = 1,883 MM BTU.

Annual electrical energy produced = 1,883 MM BTU, annual heat energy produced = 430 MM BTU. From this we have assumed that the total annual LAC for the current NHV project is also in the same proportion.

Net LAC of electricity production at NHV ($/y) = $83,871/y

Net LAC of heat production at NHV ($/y) = $19,156/y

Cost of electricity production at NHV = $83,871/551,880 kWh = $0.15/kWh = ¢15.20/kWh

Cost of heat production at NHV ($/y) = $44.5/MM BTU

Option 2a: Production of heat at NHV (high initial investment)

Table 27. Cost of producing heat at NHV (high initial investment)

	Cost ($)	**Life (y)**	**LCF**	**LAC**
Digester	**350,000**	10	0.16	**56,961**
Solids and Liquids Separation				
Separator	46,613	10	0.16	**7,586**
Separator Building	42,387	10	0.16	**6,898**
Subtotal	**89,000**			**14,484**
Others	**43,800**	10	0.16	**7,128**
Total digester capital costs	**482,800**			**78,573**
Heating System				
Dual-firing boiler	55,000	15	0.13	**7,231**
Piping and installation	25,000	15	0.13	**3,287**
Subtotal	**80,000**			**10,518**
Total project Cost	**562,800**			**89,091**

Total LAC = $89,091/y; AOM = $12,000; Benefits = $12,000/y

Annual project cost = $89,091/y + $12,000/y – $12,000/y = $89,091/y

Thermal energy available by combusting all biogas = 13,967 MM BTU/y (assuming boiler run-time of 90%, boiler efficiency = 0.85, herd size 962 cows, 80 ft^3 biogas production cow^{-1} d^{-1}, calorific value of 650 btu/scf)

Cost of heat production at NHV = $6.37/MM BTU

It should be noted that this cost above represents the net present worth of thermal energy at NHV were all biogas produced on farm were to be combusted in a boiler for use as heat. Heat needs for farms such as NHV are typically in the range of 400 – 500 MM BTU/y based on data for money saved for heating costs on farm by using biogas and/or waste heat. This assumed value of 400 – 500 MM BTU/y also matches with data for similar farms such as Noblehurst. Thus, unless a suitable market to sell the excess thermal energy can be found, the utilization of biogas for heat production, though thermodynamically the most efficient, might not be the best option for farmers.

Option 2b: Production of heat at NHV (low initial investment)

Table 28. Cost of producing electricity at NHV (low initial capital investment)

	Cost ($)	**Life (y)**	**LCF**	**LAC**
Digester	**350,000**	10	0.16	**56,961**
Solids and Liquids Separation				
Separator	46,613	10	0.16	7,586
Separator Building	42,387	10	0.16	6,898
Subtotal	**89,000**			**14,484**
Others	**43,800**	10	0.16	**7,128**
Total digester capital costs	**482,800**			**78,573**
Heating System				
Boiler (durable components)	18,000	15	0.13	2,367
Boiler parts that need replacement	7,000	6	0.23	1,607
Piping and installation	25,000	15	0.13	3,287
Subtotal	**50,000**			**7,261**
Total project Cost	**562,800**			**85,834**

Total LAC = $85,834/y; AOM = $12,000; Benefits = $12,000/y

Annual project cost = $89,091/y + $12,000/y – $12,000/y = $85,834/y

Thermal energy available by combusting all biogas = 13,967 MM BTU/y
(assuming boiler run-time of 90%, boiler efficiency = 0.85, herd size 962 cows, 80 ft^3 biogas production cow^{-1} d^{-1}, calorific value of 650 btu/scf)

Cost of heat production at NHV = $6.14/MM BTU

Option 3: Production of pipeline quality substitute natural gas at NHV

Table 29. Cost of producing pipeline quality substitute natural gas at NHV

	Cost ($)	Life (y)	LCF	LAC
Digester	**350,000**	10	0.16	**56,961**
Solids and liquids separation				
Separator	46,613	10	0.16	7,586
Separator building	42,387	10	0.16	6,898
Subtotal	**89,000**			**14,484**
Others	**43,800**	10	0.16	**7,128**
Total capital cost	**482,800**			**78,573**
Additional components for gas quality enhancement				
Separator (to remove liquid water droplets) (Superior Fabrication, Elk City, OK)	4,700	10	0.16	765
Holding Vessel (Superior Fabrication, Elk City, OK)	20,000	10	0.16	3,255
H_2S Scrubber (SulfaTreat, Chesterfield, MO)	25,200	1	1.10	27,720
Dryer (VanAir Systems, Lake City, PA)	1,000	1	1.10	1,100
Compressor (Copeland Corp, Sidney, OH)	30,000	20	0.12	3,524
2 Filters (unknown)	1,500	1	1.10	1,650
Heat exchanger (unknown)	5,000	10	0.16	814
Membranes (Air Products, Columbia, MO)	10,000	5	0.26	2,638
Membrane system (Air Products, Columbia, MO)	100,000	20	0.12	11,746
Subtotal	**197,400**			**53,211**
Total project cost	**680,200**			**131,784**

Total LAC = $131,784/y; AOM = $15,000; Benefits = $12,000/y

Farm electricity needs = 699,311 kWh/y

Additional electricity needs for 18 HP CO_2 compressor = 117,472 kWh/y

(Assuming a conversion rate of 0.745 kWh/HP-h)

Additional electricity costs = (699,311 kWh/y + 117,472 kWh/y) * $ 0.09/kWh = $73,510/y

Annual project cost = $131,784/y + $15,000 + $73,510/y – $12,000/y = $208,295/y

Net biogas production (scf/y) = 8,081,033 scf/y

Calorific value of heat obtainable annually from biogas upgrading = 3,718 MM BTU

(Assuming calorific value of CH_4 = 1000 btu/scf; CH_4 recovery from membrane = 0.852; CH_4 content in biogas = 0.6; run time of equipment = 0.9)

Cost of producing pipeline quality substitute natural gas at NHV = $56.02/MM BTU

After including the costs of pipeline construction/installation and trench excavation and backfilling, the cost of producing pipeline quality substitute natural gas at NHV can be calculated as follows:

Total costs for pipeline construction/installation = $205,920

Total costs for trench excavation = $49,280

Total costs for backfilling = $8,848

Assuming a lifetime of 20 years (LAF = 0.13) for the above costs, the additional LAC that this would represent is calculated to be $34,715.

Annual project cost = $208,295/y + $34,715/y = $243,010/y

Calorific value of heat obtainable annually from biogas upgrading = 3,718 MM BTU

Cost of producing pipeline quality substitute natural gas at NHV (including pipeline costs) = $65.36/MM BTU

Option 4: Production of H_2 at NHV (with CO_2 removal)

Table 30. Cost of producing H_2 (with CO_2 removal) at NHV

	Cost ($)	Life (y)	LCF	LAC
Digester	**350,000**	10	0.16	**56,961**
Solids and Liquids Separation				
Separator	46,613	10	0.16	7,586
Separator Building	42,387	10	0.16	6,898
Subtotal	**89,000**			**14,484**
Others	**43,800**	10	0.16	**7,128**
Total Capital Cost	**482,800**			**78,573**
Additional components for gas quality enhancement				
Separator (to remove liquid water droplets) (Superior Fabrication, Elk City, OK)	4,700	10	0.16	765
Holding Vessel (Superior Fabrication, Elk City, OK)	20,000	10	0.16	3,255
H_2S Scrubber (SulfaTreat, Chesterfield, MO)	25,200	1	1.10	27,720
Dryer (VanAir Systems, Lake City, PA)	1,000	1	1.10	1,100
Compressor (Copeland Corp, Sidney, OH)	30,000	20	0.12	3,524
2 Filters (unknown)	1,500	1	1.10	1,650
Heat exchanger (unknown)	5,000	10	0.16	814
Membranes (Air Products, Columbia, MO)	10,000	5	0.26	2,638
Membrane system (Air Products, Columbia, MO)	100,000	20	0.12	11,746
Pressure regulator (unknown)	5,000	20	0.12	587
Reformer (H_2Gen, Alexandria, VA)	280,000	15	0.13	36,813
Subtotal	**482,400**			**90,611**
Total project cost	**965,200**			**169,185**

Total LAC = $169,185/y; AOM = $18,000; Benefits = $12,000/y

Farm electricity needs = 699,311 kWh/y

Additional electricity needs for 18 HP CO_2 compressor = 117,472 kWh/y

(Assuming a conversion rate of 0.745 kWh/HP-h)

Additional electricity costs = (699,311 kWh/y + 117,472 kWh/y) * $ 0.09/kWh = $73,510/y

Annual project cost = $169,185/y + $18,000 + $73,510/y – $12,000/y = $248,695/y

Net biogas production (scf/y) = 8,081,033 scf/y

According to the reformer manufacturer's specifications, 2000 scf/h of H_2 is produced for an input of 1500 scf/h natural gas.

Amount of substitute natural gas obtainable (scf/h) = 424 scf/h

(Assuming CH_4 recovery from membrane = 0.852; CH_4 content in biogas = 0.6; run time of gas upgrade equipment = 0.9)

Amount of H_2 obtainable (scf/y) = 5,026,079 scf/y = 11,711 kg/y

Cost of producing ultrapure H_2 at NHV = $21.24/kg

Option 5: Production of H_2 at NHV (without CO_2 removal)

Table 31. Cost of producing H_2 (without CO_2 removal) at NHV

	Cost ($)	**Life (y)**	**LCF**	**LAC**
Digester	**350,000**	10	0.16	**56,961**
Solids and Liquids Separation				
Separator	46,613	10	0.16	7,586
Separator Building	42,387	10	0.16	6,898
Subtotal	**89,000**			**14,484**
Others	**43,800**	10	0.16	**7,128**
Total Capital Cost	**482,800**			**78,573**
Additional components for gas quality enhancement				
Base hydrogen plant (Harvest Energy Technology, CA)	365,000	10	0.16	59,402
HTS/MR (REB Research, MI)	220,000	10	0.16	35,804
GPU (New Energy Solutions Inc., MA)	75,000	10	0.16	12,206
Compressor (New Energy Solutions Inc., MA)	40,000	10	0.16	6,510
Subtotal	**700,000**			**113,922**
Total project cost	**1,182,800**			**192,495**

Total LAC = $192,495/y; AOM = $18,000; Benefits = $12,000/y

Farm electricity needs = 699,311 kWh/y

Additional electricity needs for H_2 compressor (assuming 18 HP) = 117,472 kWh/y

(Assuming a conversion rate of 0.745 kWh/HP-h)

Additional electricity costs = (699,311 kWh/y + 117,472 kWh/y) * $ 0.09/kWh = $73,510/y

Annual project cost = $192,495/y + $18,000 + $73,510/y – $12,000/y = $272,005/y

Net biogas production (scf/y) = 8,081,033 scf/y

Amount of CH_4 obtainable (scf/h) = 553 scf/h

According to the steam reformer manufacturer (Harvest Energy Technology, CA) 370 scfh CH_4 will yield 50 kg/d H_2 (Warren, 2004)

Amount of H_2 obtainable (kg/y) = 24,571 kg/y

(Assuming CH_4 content in biogas = 0.6; run time of steam reformer = 0.9)

Cost of producing ultrapure H_2 at NHV = $11.07/kg

APPENDIX G

Economic Analysis of Biogas Utilization Options at Farber

Option 1: Business as Usual (BAU): heat production at Farber

Table 32. Cost of producing heat at FA: BAU

Capital Costs				
Digester	**Cost ($)**	**Life (y)**	**LCF**	**LAC**
Digester Tank and materials	46,000	10	0.16	7,486
Partial building cost	5,000	5	0.26	1,319
Subtotal	**51,000**			**8,805**
Solids and Liquids Separation				
Separator	12,000	10	0.16	1,953
Composter Drier	11,000	10	0.16	1,790
Building and equipment	25,000	10	0.16	4,069
Subtotal	**48,000**			**7,812**
Others	**27,000**	10	0.16	**4,394**
Total digester capital costs	**126,000**			**21,011**
Boilers and heat exchange	**8,000**	15	0.13	**1,052**
Total capital costs ($/y)				**22,063**

Total LAC = $22,063/y; AOM = $3,000; Benefits = $5,000/y

Annual project cost = $22,063/y + $3,000/y – $5,000/y = $20,063/y

Heat needs on farm (assumed for the BAU scenario) = 100 MM BTU

Cost of heat production at FA (BAU) = $200.6/MM BTU

Thermal energy available by combusting all biogas = 1,568 MM BTU/y
(assuming boiler run-time of 90%, boiler efficiency = 0.85, herd size 108 cows, 80 ft^3 biogas production cow^{-1} d^{-1}, calorific value of 650 btu/scf)

Cost of heat production at FA (if all biogas were to combusted for heat generation) = $14.07/MM BTU

Option 2: Production of electricity at Farber

Table 33. Cost of producing electricity at FA

Capital Costs				
Digester	**Cost ($)**	**Life (y)**	**LCF**	**LAC**
Digester Tank and materials	46,000	10	0.16	7,486
Partial building cost	5,000	5	0.26	1,319
Subtotal	**51,000**			**8,805**
Solids and Liquids Separation				
Separator	12,000	10	0.16	1,953
Composter Drier	11,000	10	0.16	1,790
Building and equipment	25,000	10	0.16	4,069
Subtotal	**48,000**			**7,812**
Others	**27,000**	20	0.12	**3,171**
Total digester capital costs	**126,000**			**19,788**
Energy conversion				
Engine generator (used) and switching equipment	15,000	10	0.16	2,441
Engine rebuilding	2,000	10	0.16	325
Generator rebuilding	9,000	10	0.16	1,465
Plumbing, elec and mech systems	9,000	10	0.16	1,465
Cable to utility hook-up	8,000	10	0.16	1,302
Electrical engineering consultant	18,000	10	0.16	2,929
Subtotal	**61,000**			**9,927**
Total capital costs ($/y)	**187,000**			**29,716**

Total LAC = $29,716/y; AOM = $10,000; Benefits = $5,000/y

Annual project cost = $29,716/y + $10,000/y – $5,000/y = $34,716/y

Net biogas production (scf/y) = 485,973 scf/y

Calorific value of fuel available for power production = 175 MM BTU/y

(Assuming 60% of biogas is available for fuel production, calorific value of CH_4 = 1000 btu/scf; CH_4 content in biogas = 0.6)

Using a conversion factor of 293.07 kWh per MM BTU, we can calculate electrical energy equivalent of 175 MM BTU/y to be equal = 51,273 kWh/y

This represents a power potential of only 5.85 kW.

Electrical Energy Produced = 51,273 kWh/y

Cost of electricity production at FA = ¢67.71/kWh

Option 3: Production of pipeline quality substitute natural gas at Farber

Table 34. Cost of producing pipeline quality substitute natural gas at FA

Capital Costs				
Digester	**Cost ($)**	**Life (y)**	**LCF**	**LAC**
Digester Tank and materials	46,000	10	0.16	7,486
Partial building cost	5,000	5	0.26	1,319
Subtotal	**51,000**			**8,805**
Solids and Liquids Separation				
Separator	12,000	10	0.16	1,953
Composter Drier	11,000	10	0.16	1,790
Building and equipment	25,000	10	0.16	4,069
Subtotal	**48,000**			**7,812**
Others	**27,000**	20	0.12	**3,171**
Total digester capital costs	**126,000**			**19,788**
Additional components for gas quality enhancement				
Separator (to remove liquid water droplets) (Superior Fabrication, Elk City, OK)	4,700	10	0.16	765
Holding Vessel (Superior Fabrication, Elk City, OK)	20,000	10	0.16	3,255
H_2S Scrubber (SulfaTreat, Chesterfield, MO)	25,200	1	1.10	27,720
Dryer (VanAir Systems, Lake City, PA)	1,000	1	1.10	1,100
Compressor (Copeland Corp, Sidney, OH)	30,000	20	0.12	3,524
2 Filters (unknown)	1,500	1	1.10	1,650
Heat exchanger (unknown)	5,000	10	0.16	814
Membranes (Air Products, Columbia, MO)	10,000	5	0.26	2,638
Membrane system (Air Products, Columbia, MO)	100,000	20	0.12	11,746
Subtotal	**197,400**			**53,211**
Total capital costs ($/y)	**323,400**			**73,000**

Total LAC = $73,000/y; AOM = $15,000; Benefits = $5,000/y

Farm electricity needs = 84,495 kWh/y (assumed based on kWh/cow needs at AA)

Additional electricity costs for farm= $7,605/y

Additional electricity needs for 18 HP CO_2 compressor = 117,472 kWh/y

Additional electricity costs for compressor = $10,572/y

Additional heating costs = $1,395/y

(Assuming an annual heat need of 100 MM BTU and a natural gas cost of $13.95/MM BTU)

Annual Project Cost = $73,000/y + $15,000/y + $7,605/y + $10,572/y + $1,395/y – $5,000/y = $102,572/y

Net biogas production (scf/y) = 485,973 scf/y

Calorific value of heat obtainable annually from biogas upgrading = 224 MM BTU

(Assuming calorific value of CH_4 = 1000 btu/scf; CH_4 recovery from membrane = 0.852; CH_4 content in biogas = 0.6; run time of equipment = 0.9)

Cost of producing pipeline quality substitute natural gas at FA Dairy = $459/MM BTU

After including the costs of pipeline construction/installation and trench excavation and backfilling, the cost of producing pipeline quality substitute natural gas at FA can be calculated as follows:

Total costs for pipeline construction/installation = $205,920

Total costs for trench excavation = $49,280

Total costs for backfilling = $8,848

Assuming a lifetime of 20 years (LAF = 0.13) for the above costs, the additional LAC that this would represent is calculated to be $34,715.

Annual project cost = $102,572/y + $34,715/y = $137,287/y

Calorific value of heat obtainable annually from biogas upgrading = 224 MM BTU

Cost of producing pipeline quality substitute natural gas at FA (including pipeline costs) = $612/MM BTU

Option 4: Production of H_2 at Farber (with CO_2 removal)

Table 35. Cost of producing H_2 (with CO_2 removal) at FA

Capital Costs				
Digester	**Cost ($)**	**Life (y)**	**LCF**	**LAC**
Digester Tank and materials	46,000	10	0.16	7,486
Partial building cost	5,000	5	0.26	1,319
Subtotal	**51,000**			**8,805**
Solids and Liquids Separation				
Separator	12,000	10	0.16	1,953
Composter Drier	11,000	10	0.16	1,790
Building and equipment	25,000	10	0.16	4,069
Subtotal	**48,000**			**7,812**
Others	**27,000**	20	0.12	**3,171**
Total digester capital costs	**126,000**			**19,788**
Additional components for gas quality enhancement				
Separator (to remove liquid water droplets) (Superior Fabrication, Elk City, OK)	4,700	10	0.16	765
Holding Vessel (Superior Fabrication, Elk City, OK)	20,000	10	0.16	3,255
H_2S Scrubber (SulfaTreat, Chesterfield, MO)	25,200	1	1.10	27,720
Dryer (VanAir Systems, Lake City, PA)	1,000	1	1.10	1,100
Compressor (Copeland Corp, Sidney, OH)	30,000	20	0.12	3,524
2 Filters (unknown)	1,500	1	1.10	1,650
Heat exchanger (unknown)	5,000	10	0.16	814
Membranes (Air Products, Columbia, MO)	10,000	5	0.26	2,638
Membrane system (Air Products, Columbia, MO)	100,000	20	0.12	11,746
Pressure regulator (unknown)	5,000	20	0.12	587
Reformer (H_2Gen, Alexandria, VA)	280,000	15	0.13	36,813
Subtotal	**482,400**			**90,611**
Total capital costs ($/y)	**608,400**			**110,400**

Total LAC = $110,400/y; AOM = $18,000; Benefits = $5,000/y

Farm electricity needs = 84,495 kWh/y (assumed based on kWh/cow needs at AA)

Additional electricity costs for farm= $7,605/y

Additional electricity needs for 18 HP CO_2 compressor = 117,472 kWh/y

Additional electricity costs for compressor = $10,572/y

Additional heating costs = $1,395/y

(Assuming an annual heat need of 100 MM BTU and a natural gas cost of $13.95/MM BTU)

Annual Project Cost = $110,400/y + $18,000/y + $7,605/y + $10,572/y + $1,395/y – $5,000/y = $142,972/y

Net biogas production (scf/y) = 485,973 scf/y

According to the reformer manufacturer's specifications, 2000 scf/h of H_2 is produced for an input of 1500 scf/h natural gas.

Amount of substitute natural gas obtainable (scf/h) = 26 scf/h

(Assuming CH_4 recovery from membrane = 0.852; CH_4 content in biogas = 0.6; run time of gas upgrade equipment = 0.9)

Amount of H_2 obtainable (scf/y) = 298,115 scf/y = 704 kg/y

Cost of producing ultrapure H_2 at FA Dairy = $203.01/kg

Option 4: Production of H_2 at Farber (without CO_2 removal)

Table 36. Cost of producing H_2 (without CO_2 removal) at FA

Capital Costs				
Digester	**Cost ($)**	**Life (y)**	**LCF**	**LAC**
Digester Tank and materials	46,000	10	0.16	7,486
Partial building cost	5,000	5	0.26	1,319
Subtotal	**51,000**			**8,805**
Solids and Liquids Separation				
Separator	12,000	10	0.16	1,953
Composter Drier	11,000	10	0.16	1,790
Building and equipment	25,000	10	0.16	4,069
Subtotal	**48,000**			**7,812**
Others	**27,000**	20	0.12	**3,171**
Total digester capital costs	**126,000**			**19,788**
Additional components for gas quality enhancement				
Base hydrogen plant (Harvest Energy Technology, CA)	365,000	10	0.16	59,402
HTS/MR (REB Research, MI)	220,000	10	0.16	35,804
GPU (New Energy Solutions Inc., MA)	75,000	10	0.16	12,206
Compressor (New Energy Solutions Inc., MA)	40,000	10	0.16	6,510
Subtotal	**700,000**			**113,922**
Total capital costs ($/y)	**826,000**			**133,710**

Total LAC = $133,710/y; AOM = $18,000; Benefits = $5,000/y

Farm electricity needs = 84,495 kWh/y (assumed based on kWh/cow needs at AA)

Additional electricity costs for farm= $7,605/y

Additional electricity needs for 18 HP CO_2 compressor = 117,472 kWh/y

Additional electricity costs for compressor = $10,572/y

Additional heating costs = $1,395/y

(Assuming an annual heat need of 100 MM BTU and a natural gas cost of $13.95/MM BTU)

Annual Project Cost = $133,710/y + $18,000/y + $7,605/y + $10,572/y + $1,395/y – $5,000/y = $166,282/y

Net biogas production (scf/y) = 485,973 scf/y

Amount of CH_4 obtainable (scf/h) = 33 scf/h

According to the steam reformer manufacturer (Harvest Energy Technology, CA) 370 scfh CH_4 will yield 50 kg/d H_2 (Warren, 2004)

Amount of H_2 obtainable (kg/y) = 1,478 kg/y

(Assuming CH_4 content in biogas = 0.6; run time of steam reformer = 0.9)

Cost of producing ultrapure H_2 at FA Dairy = $112.53/kg

APPENDIX H

Economic Analysis of Biogas Utilization Options at Ridgeline

Special note for economic analysis of RL to consider co-digestion of manure with food processing residuals

It should be noted that RL is the only farm that co-digests manure and food processing residuals. For the BAU scenario, total annual biogas production is used from data collected (Jan 2004 through May 2005) like the other dairies. For the high biogas potential scenario, the annual biogas production is calculated as follows.

Biogas production at RL per cow per day under normal conditions (assumed) = 65 scf

This is a reasonable assumption similar to measured average daily values at AA Dairy which is a farm of similar size.

Contribution to biogas production from food residuals under normal conditions = (total production – biogas production due to manure)

Average total biogas production per day at RL = 130,337 scf/d

Average biogas contribution from manure per day at RL = (527 * 65 scf/d) = 34,255 scf/d

Contribution to biogas production from food residuals under normal conditions = 96,082 scf/d

If biogas production per cow per day under conditions of higher biogas potentials (assumed) = 100 scf,

Average total biogas production per day = 96,082 scf/d + (527 * 100 scf/d) = 148,782 scf/d

Therefore, for the high biogas potential scenario, a total annual biogas production of 148,782 scf/y is used for the economic analysis at RL. To examine the fate of farms similar in size/costs as RL but with no access to food residuals for co-digestion, a third scenario is investigated by assuming that there is no contribution to biogas production

due to food residuals, in which case an equivalent biogas production per cow per day of 100 scf/d is used for the economic analysis.

Option 1: Business as Usual (BAU): electricity and heat production at Ridgeline

Table 37. Cost of producing electricity at RL: BAU

Capital Costs				
Digester	**Cost ($)**	Life (y)	LCF	LAC
Digester Construction and Materials	260,000	10	0.16	42,314
Mixture Pumps	77,000	10	0.16	12,531
Subtotal	**337,000**			**54,845**
Solids and Liquids Separation				
Separator	46,613	10	0.16	7,586
Separator Building	15,076	10	0.16	2,454
Subtotal	**61,689**			**10,040**
Others	**56,900**	10	0.16	**9,260**
Total digester capital costs	**455,589**			**74,145**
Engine-Generator Set				
Engine Generator	96,317	10	0.16	15,675
Switching Equipment	10,000	10	0.16	1,627
Engine Building	22,614	10	0.16	3,680
Subtotal	**128,931**			**20,983**
Boiler and piping	**50,000**	15	0.13	**6,574**
Total Capital Cost	**634,520**			**101,702**

Total LAC = $101,702/y; AOM = $12,000; Benefits = $24,000/y (solids $4,000/y + tipping fees for food residuals $20,000/y)

Total annual project cost = $101,702/y + $12,000/y – $24,000/y = $89,702/y

Electrical energy produced = 1,115,634 kWh/y

Annual heat needs (assumed to be similar to NHV) = 400 MM BTU/y

(Assuming full capacity of microturbines is achievable and assuming 90% run-time)

Of the total LAC, it is assumed that LAC for heat production and LAC for electricity production are in the same ratio as the energy benefits derived from both of them. It is assumed that the heat production is 400 MM BTU at RL (similar to NHV heat needs assumption). Using a conversion factor of 293.07 kWh per MM BTU, we can calculate thermal energy equivalent of 1,115,634 kWh/y to be = 3,807 MM BTU. Annual electrical energy produced = 3,807 MM BTU, annual heat energy produced = 400 MM BTU. From this we have assumed that the total annual LAC for the current RL project is also in the same proportion.

Total annual project cost = $89,702/y

Net LAC of electricity production at RL ($/y) = $81,172/y

Net LAC of heat production at RL ($/y) = $8,529/y

Cost of electricity production at RL = $83,887/1,115,634 kWh = $0.07/kWh = ¢7.28/kWh

Cost of heat production at RL = $21.32/MM BTU

Option 2a: Production of heat at Ridgeline (high initial investment)

Table 38. Cost of producing heat at RL (high initial investment)

Capital Costs				
Digester	**Cost ($)**	Life (y)	LCF	LAC
Digester Construction and Materials	260,000	10	0.16	42,314
Mixture Pumps	77,000	10	0.16	12,531
Subtotal	**337,000**			**54,845**
Solids and Liquids Separation				
Separator	46,613	10	0.16	7,586
Separator Building	15,076	10	0.16	2,454
Subtotal	**61,689**			**10,040**
Others	**56,900**	10	0.16	**9,260**
Total digester capital costs	**455,589**			**74,145**
Boiler				
Dual-firing boiler	55,000	15	0.13	**7,231**
Piping and installation	25,000	15	0.13	**3,287**
Subtotal	**80,000**			**10,518**
Total Capital Cost	**535,589**			**84,663**

Total LAC = $84,663/y; AOM = $12,000; Benefits = $24,000/y (solids $4,000/y + tipping fees for food residuals $20,000/y)

Total annual project cost = $84,663/y + $12,000/y – $24,000/y = $72,663/y

Net biogas production (scf/y) = 48,190,846 scf/y

Thermal energy available by combusting all biogas = 23,962 MM BTU/y (assuming boiler run-time of 90%, boiler efficiency = 0.85, calorific value of 650 btu/scf)

Cost of heat production at RL = $3.03/MM BTU

If there is no access to residuals/waste from food processing industries, and assuming biogas production of 80 ft^3 cow^{-1} d^{-1},

Net biogas production (scf/y) = 527 cows * 80 ft^3 cow^{-1} d^{-1} * 365 = 42,160 scf/y

Thermal energy available by combusting all biogas = 7651 MM BTU/y
(assuming boiler run-time of 90%, boiler efficiency = 0.85, calorific value of 650 btu/scf)

Cost of heat production at RL = $9.49/MM BTU

Option 2b: Production of heat at Ridgeline (low initial investment)

Table 39. Cost of producing heat at RL (low initial investment)

Capital Costs				
Digester	**Cost ($)**	Life (y)	LCF	LAC
Digester Construction and Materials	260,000	10	0.16	42,314
Mixture Pumps	77,000	10	0.16	12,531
Subtotal	**337,000**			**54,845**
Solids and Liquids Separation				
Separator	46,613	10	0.16	7,586
Separator Building	15,076	10	0.16	2,454
Subtotal	**61,689**			**10,040**
Others	**56,900**	10	0.16	**9,260**
Total digester capital costs	**455,589**			**74,145**
Boiler System				
Boiler (durable components)	18,000	15	0.13	2,367
Boiler parts that need replacement	7,000	6	0.23	1,607
Piping and installation	25,000	15	0.13	3,287
Subtotal	**50,000**			**7,261**
Total Capital Cost	**505,589**			**81,406**

Total LAC = $102,389/y; AOM = $12,000; Benefits = $24,000/y (solids $4,000/y + tipping fees for food residuals $20,000/y)

Total annual project cost = $81,406/y + $12,000/y – $24,000/y = $69,406/y

Net biogas production (scf/y) = 48,190,846 scf/y

Thermal energy available by combusting all biogas = 23,962 MM BTU/y (assuming boiler run-time of 90%, boiler efficiency = 0.85, calorific value of 650 btu/scf)

Cost of heat production at RL = $2.89/MM BTU

If there is no access to residuals/waste from food processing industries, and assuming biogas production of 80 ft^3 cow^{-1} d^{-1},

Net biogas production (scf/y) = 527 cows * 80 ft^3 cow^{-1} d^{-1} * 365 = 42,160 scf/y

Thermal energy available by combusting all biogas = 7651 MM BTU/y
(assuming boiler run-time of 90%, boiler efficiency = 0.85, calorific value of 650 btu/scf)

Cost of heat production at RL = $9.07/MM BTU

Option 3: Production of pipeline quality substitute natural gas at Ridgeline

Table 40. Cost of producing pipeline quality substitute natural gas at RL

Capital Costs						
Digester	**Cost ($)**	**Life (y)**	**LCF**	**LAC**		
Digester Construction and Materials	260,000	10	0.16	42,314		
Mixture Pumps	77,000	10	0.16	12,531		
Subtotal	**337,000**			**54,845**		
Solids and Liquids Separation						
Separator	46,613	10	0.16	7,586		
Separator Building	15,076	10	0.16	2,454		
Subtotal	**61,689**			**10,040**		
Others	**56,900**	10	0.16	**9,260**		
Total Capital Cost	**455,589**			**74,145**		
Additional components for gas quality enhancement						
	Cost/Unit	**# Units**	**Eqpt. cost**	**Life (y)**	**LCF**	**LAC**
Separator (to remove liquid water droplets) (Superior Fabrication, Elk City, OK)	4,700	2	9,400	10	0.16	1,530
Holding Vessel (Superior Fabrication, Elk City, OK)	20,000	3	60,000	10	0.16	9,765
H_2S Scrubber (SulfaTreat, Chesterfield, MO)	25,200	2	50,400	1	1.10	55,440
Dryer (VanAir Systems, PA)	1,000	4	4,000	1	1.10	4,400
Compressor (Copeland Corp, Sidney, OH)	30,000	1	30,000	20	0.12	3,524
2 Filters (unknown)	1,500	4	6,000	1	1.10	6,600
Heat exchanger (unknown)	5,000	1	5,000	10	0.16	814
Membranes (Air Products, MO)	10,000	6	60,000	5	0.26	15,828
Membrane system (Air Products, MO)	100,000	1	100,000	20	0.12	11,746
Subtotal			**324,800**			**109,646**

Total LAC = $109,646/y + $74,145/y; AOM = $15,000; Benefits = $24,000/y

Farm electricity and heat costs = $41,000/y

Additional electricity costs for 18 HP CO_2 compressor (117,472 kWh/y) = $10,572/y

(Assuming a conversion rate of 0.745 kWh/HP-h)

Total additional electricity and heat costs = $41,000/y + $10,572/y = $51,572/y

Annual Project Cost = $109,646/y + $74,145/y + $15,000 + $51,572/y – $24,000/y = $226,363/y

Net biogas production (scf/y) = 48,190,846 scf/y

Calorific value of heat obtainable annually from biogas upgrading = 22,172 MM BTU

(Assuming calorific value of CH_4 = 1000 btu/scf; CH_4 recovery from membrane = 0.852; CH_4 content in biogas = 0.6; run time of equipment = 0.9)

Cost of producing pipeline quality substitute natural gas at RL Dairy = $10.21/MM BTU

After including the costs of pipeline construction/installation and trench excavation and backfilling, the cost of producing pipeline quality substitute natural gas at RL Dairy can be calculated as follows:

Total costs for pipeline construction/installation = $205,920

Total costs for trench excavation = $49,280

Total costs for backfilling = $8,848

Assuming a lifetime of 20 years (LAF = 0.13) for the above costs, the additional LAC that this would represent is calculated to be $34,715.

Annual project cost = $226,363/y + $34,715/y = $261,078/y

Calorific value of heat obtainable annually from biogas upgrading = 22,172 MM BTU

Cost of producing pipeline quality substitute natural gas at RL Dairy (including pipeline costs) = $11.77/MM BTU

Option 4: Production of H_2 at Ridgeline (with CO_2 removal)

Table 41. Cost of producing H_2 (with CO_2 removal) at RL

Capital Costs						
Digester	**Cost ($)**	**Life (y)**	**LCF**	**LAC**		
Digester constr/matl	260,000	10	0.16	42,314		
Mixture Pumps	77,000	10	0.16	12,531		
Subtotal	**337,000**			**54,845**		
Solids and Liquids Separation						
Separator	46,613	10	0.16	7,586		
Separator Building	15,076	10	0.16	2,454		
Subtotal	**61,689**			**10,040**		
Others	**56,900**	10	0.16	**9,260**		
Total Capital Cost	**455,589**			**74,145**		
Additional components for gas quality enhancement						
	Cost ($)	**# units**	**eqpt cost**	**Life (y)**	**LCF**	**LAC**
Separator (to remove liquid water droplets) (Superior Fabrication)	4,700	2	9,400	10	0.16	1,530
Holding Vessel (Superior Fabrication, OK)	20,000	3	60,000	10	0.16	9,765
H_2S Scrubber (SulfaTreat, Chesterfield, MO)	25,200	2	50,400	1	1.10	55,440
Dryer (VanAir Systems)	1,000	4	4,000	1	1.10	4,400
Compressor (Copeland Corp, Sidney, OH)	30,000	1	30,000	20	0.12	3,524
2 Filters (unknown)	1,500	4	6,000	1	1.10	6,600
Heat exchanger (unknown)	5,000	1	5,000	10	0.16	814
Membranes (Air Products, Columbia, MO)	10,000	6	60,000	5	0.26	15,828
Membrane system (Air Products, Columbia, MO)	100,000	1	100,000	20	0.12	11,746
Pressure regulator (unknown)	5,000	2	10,000	20	0.12	1,175
Reformer (H_2Gen, Alexandria, VA)	280,000	1	280,000	15	0.13	36,813
Subtotal	**482,400**					**147,633**

Total LAC = \$147,633/y + \$74,145/y; AOM = \$18,000; Benefits = \$24,000/y
Farm electricity and heat costs = \$41,000/y

Additional electricity costs for 18 HP CO_2 compressor (117,472 kWh/y) = \$10,572/y

(Assuming a conversion rate of 0.745 kWh/HP-h)

Total additional electricity and heat costs = \$41,000/y + \$10,572/y = \$51,572/y

Annual Project Cost = \$147,633/y + \$74,145/y + \$18,000 + \$51,572/y – \$24,000/y = \$267,351/y

Net biogas production (scf/y) = 45,573,140 scf/y

According to the reformer manufacturer's specifications, 2000 scf/h of H_2 is produced for an input of 1500 scf/h natural gas.

Amount of substitute natural gas obtainable (scf/h) = 3,331 scf/h

(Assuming CH_4 recovery from membrane = 0.852; CH_4 content in biogas = 0.6; run time of gas upgrade equipment = 0.9)

Amount of H_2 obtainable (scf/y) = 5,026,079 scf/y = 68,942 kg/y

Cost of producing ultrapure H_2 at RL Dairy = \$3.88/kg

Option 5: Production of H_2 at Ridgeline (without CO_2 removal)

Table 42. Cost of producing H_2 (without CO_2 removal) at RL

Capital Costs						
Digester	**Cost ($)**	**Life (y)**	**LCF**	**LAC**		
Digester Construction and Materials	260,000	10	0.16	42,314		
Mixture Pumps	77,000	10	0.16	12,531		
Subtotal	**337,000**			**54,845**		
Solids and Liquids Separation						
Separator	46,613	10	0.16	7,586		
Separator Building	15,076	10	0.16	2,454		
Subtotal	**61,689**			**10,040**		
Others	**56,900**	10	0.16	**9,260**		
Total Capital Cost	**455,589**			**74,145**		
Additional components for gas quality enhancement						
	Cost ($)	**# units**	**eqpt cost**	**Life (y)**	**LCF**	**LAC**
Base hydrogen plant (Harvest Energy Technology, CA)	365,000	1	365,000	10	0.16	59,402
HTS/MR (REB Research, MI)	220,000	2	440,000	10	0.16	71,608
GPU (New Energy Solutions Inc., MA)	75,000	2	150,000	10	0.16	24,412
Compressor (New Energy Solutions Inc., MA)	40,000	1	40,000	10	0.16	6,510
Subtotal	**700,000**					**161,932**

Total LAC = \$161,932/y + \$74,145; AOM = \$18,000; Benefits = \$24,000/y
Farm electricity and heat costs = \$41,000/y

Additional electricity costs for 18 HP CO_2 compressor (117,472 kWh/y) = \$10,572/y

(Assuming a conversion rate of 0.745 kWh/HP-h)

Total additional electricity and heat costs = \$41,000/y + \$10,572/y = \$51,572/y

Annual project cost = \$161,932/y + \$74,145/y + \$18,000 + \$51,572/y – \$24,000/y = \$281,649/y

Net biogas production (scf/y) = 45,573,140 scf/y

Amount of CH_4 obtainable (scf/h) = 3,258 scf/h

According to the steam reformer manufacturer (Harvest Energy Technology, CA) 370 scfh CH_4 will yield 50 kg/d H_2 (Warren, 2004)

Amount of H_2 obtainable (kg/y) = 144,648 kg/y

(Assuming CH_4 content in biogas = 0.6; run time of steam reformer = 0.9)

Cost of producing ultrapure H_2 at RL Dairy = $1.95/kg

APPENDIX I

Economic Analysis of Biogas Utilization Options at Noblehurst

Option 1: Business as Usual (BAU): electricity and heat production at NH

Table 43. Cost of producing electricity at NH: BAU

Digester	**Cost ($)**	**Life (y)**	**LCF**	**LAC**
Digester Construction and Materials	250,000	10	0.16	40,686
Cover for digester	60,000	10	0.16	9,765
Subtotal	**310,000**			**50,451**
Solids and Liquids Separation				
Separator	26,000	10	0.16	4,231
Separator Building	35,000	10	0.16	5,696
Subtotal	**61,000**			**9,927**
Others (flare, pumps)	**14,200**	10	0.16	**2,311**
Total digester capital costs	**385,200**			**62,690**
Engine-Generator Set				
Engine Generator	241,000	10	0.16	39,222
Switching Equipment	18,000	10	0.16	2,929
Engine Building	43,500	10	0.16	7,079
Subtotal	**302,500**			**49,230**
Total Capital Cost	**687,700**			**111,920**

Total LAC = $111,920/y; AOM = $12,000; Benefits = $11,680/y (note that compost sales are projected only at $2/yd^3 at NH whereas it was estimated at $8/yd^3 at AA and $10/yd^3 at FA)

Annual project cost = $111,920/y + $12,000/y – $11,680/y = $112,240/y

Electrical energy produced = 635,062 kWh/y

(Assuming full capacity of microturbines is achievable and assuming 90% run-time)

Of the total LAC, it is assumed that LAC for heat production and LAC for electricity production are in the same ratio as the energy benefits derived from both of them. It is assumed that the heat production is 430 MM BTU at NH (similar to the assumption made for NHV). Using a conversion factor of 293.07 kWh per MM BTU, we can calculate thermal energy equivalent of 635,062 kWh/y to be = 2,167 MM BTU. Annual electrical energy produced = 2,167 MM BTU, annual heat energy produced = 430 MM BTU. From this we have assumed that the total annual LAC for the current NH project is also in the same proportion.

Total annual project cost = $112,240/y

Net LAC of electricity production at NH ($/y) = $93,651/y

Net LAC of heat production at NH ($/y) = $18,589/y

Cost of electricity production at NH = ¢14.75/kWh

Cost of heat production at NH ($/y) = $43.22/MM BTU

Option 2a: Production of heat at NH (high initial investment)

Table 44. Cost of producing heat at NH (high initial investment)

Digester	**Cost ($)**	**Life (y)**	**LCF**	**LAC**
Digester Construction and Materials	250,000	10	0.16	40,686
Cover for digester	60,000	10	0.16	9,765
Subtotal	**310,000**			**50,451**
Solids and Liquids Separation				
Separator	26,000	10	0.16	4,231
Separator Building	35,000	10	0.16	5,696
Subtotal	**61,000**			**9,927**
Others (flare, pumps)	**14,200**	10	0.16	**2,311**
Total digester capital costs	**385,200**			**62,690**
Boiler System				
Dual-firing boiler	55,000	15	0.13	**7,231**
Piping and installation	25,000	15	0.13	**3,287**
Subtotal	**80,000**			**10,518**
Total Capital Cost	**465,200**			**73,208**

Total LAC = $73,208/y; AOM = $12,000; Benefits = $11,680/y (note that compost sales are projected only at $2/yd^3 at NH whereas it was estimated at $8/yd^3 at AA and $10/yd^3 at FA)

Annual project cost = $73,208/y + $12,000/y – $11,680/y = $73,528/y

Net biogas production (scf/y) =40,996,800 scf/y

Thermal energy available by combusting all biogas = 20,385 MM BTU/y
(assuming boiler run-time of 90%, boiler efficiency = 0.85, herd size 1,404 cows, 80 ft^3 biogas production cow^{-1} d^{-1}, calorific value of 650 btu/scf)

Cost of heat production at NHV = $3.61/MM BTU

Option 2b: Production of heat at NH (low initial investment)

Table 45. Cost of producing heat at NH (low initial investment)

Digester	**Cost ($)**	**Life (y)**	**LCF**	**LAC**
Digester Construction and Materials	250,000	10	0.16	40,686
Cover for digester	60,000	10	0.16	9,765
Subtotal	**310,000**			**50,451**
Solids and Liquids Separation				
Separator	26,000	10	0.16	4,231
Separator Building	35,000	10	0.16	5,696
Subtotal	**61,000**			**9,927**
Others (flare, pumps)	**14,200**	10	0.16	**2,311**
Total digester capital costs	**385,200**			**62,690**
Boiler System				
Boiler (durable components)	18,000	15	0.13	2,367
Boiler parts that need replacement	7,000	6	0.23	1,607
Piping and installation	25,000	15	0.13	3,287
Subtotal	**50,000**			**7,261**
Total Capital Cost	**435,200**			**69,951**

Total LAC = $69,951/y; AOM = $12,000; Benefits = $11,680/y (note that compost sales are projected only at $2/yd^3 at NH whereas it was estimated at $8/yd^3 at AA and $10/yd^3 at FA)

Annual project cost = $69,951/y + $12,000/y – $11,680/y = $70,271/y

Net biogas production (scf/y) =40,996,800 scf/y

Thermal energy available by combusting all biogas = 20,385 MM BTU/y
(assuming boiler run-time of 90%, boiler efficiency = 0.85, herd size 1,404 cows, 80 ft^3 biogas production cow^{-1} d^{-1}, calorific value of 650 btu/scf)

Cost of heat production at NHV = $3.44/MM BTU

Option 3: Production of pipeline quality substitute natural gas at NH

Table 46. Cost of producing pipeline quality substitute natural gas at NH

Digester	**Cost ($)**	**Life (y)**	**LCF**	**LAC**		
Digester Construction and Materials	250,000	10	0.16	40,686		
Cover for digester	60,000	10	0.16	9,765		
Subtotal	**310,000**			**50,451**		
Solids and Liquids Separation						
Separator	26,000	10	0.16	4,231		
Separator Building	35,000	10	0.16	5,696		
Subtotal	**61,000**			**9,927**		
Others (flare, pumps)	**14,200**	10	0.16	**2,311**		
Total digester capital costs	**385,200**			**62,690**		
Additional components for gas quality enhancement						
	cost/unit	**# units**	**eqpt cost**	**Life (y)**	**LCF**	**LAC**
Separator (to remove liquid water droplets) (Superior Fabrication)	4,700	2	9,400	10	0.16	1,530
Holding Vessel (Superior Fabrication)	20,000	1	20,000	10	0.16	3,255
H_2S Scrubber (SulfaTreat, Chesterfield, MO)	25,200	1	25,200	1	1.10	27,720
Dryer (VanAir Systems, PA)	1,000	2	2,000	1	1.10	2,200
Compressor (Copeland Corp, Sidney, OH)	30,000	1	30,000	20	0.12	3,524
2 Filters (unknown)	1,500	2	3,000	1	1.10	3,300
Heat exchanger (unknown)	5,000	1	5,000	10	0.16	814
Membranes (Air Products, MO)	10,000	1	10,000	5	0.26	2,638
Membrane system (Air Products, MO)	100,000	1	100,000	20	0.12	11,746
Subtotal			**204,600**			**56,726**

Total LAC = $56,726/y + $62,690/y; AOM = $15,000; Benefits = $11,680/y

Farm electricity and heat costs = $66,000/y

Additional electricity costs for 18 HP CO_2 compressor (117,472 kWh/y) = $10,572/y

(Assuming a conversion rate of 0.745 kWh/HP-h)

Total additional electricity and heat costs = $76,572/y

Annual project cost = $56,726/y + $62,690/y + $15,000 + $76,572/y – $11,680/y = $199,308/y

Net biogas production (scf/y) =17,673,866 scf/y

Calorific value of heat obtainable annually from biogas upgrading = 8,131 MM BTU

(Assuming calorific value of CH_4 = 1000 btu/scf; CH_4 recovery from membrane = 0.852; CH_4 content in biogas = 0.6; run time of equipment = 0.9)

Cost of producing pipeline quality substitute natural gas at NH Dairy = $24.51/MM BTU

After including the costs of pipeline construction/installation and trench excavation and backfilling, the cost of producing pipeline quality substitute natural gas at NH Dairy can be calculated as follows:

Total costs for pipeline construction/installation = $205,920

Total costs for trench excavation = $49,280

Total costs for backfilling = $8,848

Assuming a lifetime of 20 years (LAF = 0.13) for the above costs, the additional LAC that this would represent is calculated to be $34,715.

Annual project cost = $199,308/y + $34,715/y = $234,023/y

Calorific value of heat obtainable annually from biogas upgrading = 8,131 MM BTU

Cost of producing pipeline quality substitute natural gas at NH Dairy (including pipeline costs) = $28.78/MM BTU

Option 4: Production of H_2 at NH (with CO_2 removal)

Table 47. Cost of producing H_2 (with CO_2 removal) at NH

Digester		**Life (y)**	**LCF**	**LAC**		
Digester Construction and Materials	250,000	10	0.16	40,686		
Cover for digester	60,000	10	0.16	9,765		
Subtotal	**310,000**			**50,451**		
Solids and Liquids Separation						
Separator	26,000	10	0.16	4,231		
Separator Building	35,000	10	0.16	5,696		
Subtotal	**61,000**			**9,927**		
Others (flare, pumps)	**14,200**	10	0.16	**2,311**		
Total digester capital costs	**385,200**			**62,690**		
Additional components for gas quality enhancement						
	cost/unit	**# units**	**eqpt cost**	**Life (y)**	**LCF**	**LAC**
Separator (to remove liquid water droplets) (Superior Fabrication OK)	4,700	2	9,400	10	0.16	1,530
Holding Vessel (Superior Fabrication, Elk City, OK)	20,000	1	20,000	10	0.16	3,255
H_2S Scrubber (SulfaTreat, Chesterfield, MO)	25,200	1	25,200	1	1.10	27,720
Dryer (VanAir Systems, Lake City, PA)	1,000	2	2,000	1	1.10	2,200
Compressor (Copeland Corp, Sidney, OH)	30,000	1	30,000	20	0.12	3,524
2 Filters (unknown)	1,500	2	3,000	1	1.10	3,300
Heat exchanger (unknown)	5,000	1	5,000	10	0.16	814
Membranes (Air Products, Columbia, MO)	10,000	1	10,000	5	0.26	2,638
Membrane system (Air Products, Columbia, MO)	100,000	1	100,000	20	0.12	11,746
Pressure regulator (unknown)	5,000	2	10,000	20	0.12	1,175
Reformer (H_2Gen, Alexandria, VA)	280,000	1	280,000	15	0.13	36,813
Subtotal			**494,600**			**94,713**

Total LAC = \$94,713/y + \$62,690/y; AOM = \$18,000; Benefits = \$11,680/y

Farm electricity and heat costs = \$66,000/y

Additional electricity costs for 18 HP CO_2 compressor (117,472 kWh/y) = \$10,572/y

(Assuming a conversion rate of 0.745 kWh/HP-h)

Total additional electricity and heat costs = \$76,572/y

Annual project cost = \$94,713/y + \$62,690/y + \$18,000 + \$76,572/y – \$11,680/y = \$240,295/y

Net biogas production (scf/y) =17,673,866 scf/y

According to the reformer manufacturer's specifications, 2000 scf/h of H_2 is produced for an input of 1500 scf/h natural gas.

Amount of substitute natural gas obtainable (scf/h) = 928 scf/h

(Assuming CH_4 recovery from membrane = 0.852; CH_4 content in biogas = 0.6; run time of gas upgrade equipment = 0.9)

Amount of H_2 obtainable (scf/y) = 5,026,079 scf/y = 25,613 kg/y

Cost of producing ultrapure H_2 at NH Dairy = \$9.38/kg

Option 5: Production of H_2 at NH (without CO_2 removal)

Table 48. Cost of producing H_2 (without CO_2 removal) at NH

Digester		**Life (y)**	**LCF**	**LAC**		
Digester Construction and Materials	250,000	10	0.16	40,686		
Cover for digester	60,000	10	0.16	9,765		
Subtotal	**310,000**			**50,451**		
Solids and Liquids Separation						
Separator	26,000	10	0.16	4,231		
Separator Building	35,000	10	0.16	5,696		
Subtotal	**61,000**			**9,927**		
Others (flare, pumps)	**14,200**	10	0.16	**2,311**		
Total digester capital costs	**385,200**			**62,690**		
Additional components for gas quality enhancement						
		# units	**eqpt cost**	**Life (y)**	**LCF**	**LAC**
Base hydrogen plant (Harvest Energy Technology, CA)	365,000	1	365,000	10	0.16	59,402
HTS/MR (REB Research, MI)	220,000	2	440,000	10	0.16	71,608
GPU (New Energy Solutions Inc., MA)	75,000	2	150,000	10	0.16	24,412
Compressor (New Energy Solutions Inc., MA)	40,000	1	40,000	10	0.16	6,510
Subtotal			**995,000**			**161,932**

Total LAC = \$161,932/y + \$62,690/y; AOM = \$18,000; Benefits = \$11,680/y

Farm electricity and heat costs = \$66,000/y

Additional electricity costs for 18 HP CO_2 compressor (117,472 kWh/y) = \$10,572/y

(Assuming a conversion rate of 0.745 kWh/HP-h)

Total additional electricity and heat costs = \$76,572/y

Annual project cost = \$161,932/y + \$62,690/y + \$18,000 + \$76,572/y – \$11,680/y = \$307,514/y

Net biogas production (scf/y) =17,673,866 scf/y

Amount of CH_4 obtainable (scf/h) = 1,211 scf/h

According to the steam reformer manufacturer (Harvest Energy Technology, CA) 370 scfh CH_4 will yield 50 kg/d H_2 (Warren, 2004)

Amount of H_2 obtainable (kg/y) = 53,738 kg/y

(Assuming CH_4 content in biogas = 0.6; run time of steam reformer = 0.9)

Cost of producing ultrapure H_2 at NH Dairy = $5.72/kg

APPENDIX J

Table 43. List of CAFOs and animal population in New York State (Source: Ma, 2006)

Name of Operation	City	Type and Number of Animals
Dutchfield Farm	Armenia	400 heifers
Ace Farm	Monroe	138,000 laying hens
Harold Brey & Sons, Inc.	Jeffersonville	240,000 laying hens
K-Brand Farms	Woodridge	240,000 laying hens and 70,000 pullets
Hill Top Farm, Inc.	Voorheesville	400 slaughter cattle and 400 feeder cattle
Willow Lane Cattle Feeders, Inc	Berne, NY	1600 slaughter cattle, 200 feeder cattle and 60,000 ducks
Eklund Farm Machinery, Inc.	Stamford	150 heifers
Giroux's Poultry Farm	Chazy	600,000 laying hens and 200 heifers
Thomas Poultry Farm Of Schuylerville	Schuylerville	180,000 laying hens
Dodge Farms	Belleville	220 heifers
Ebblie Farms	Watertown	225 calves
Olin	Harpursville	300 heifers and 200 calves
Plainville Turkey Farm, Inc.	Ira	49,000 turkeys and 45 heifers
Edward E. Primose	Cato	400 slaughter cattle
Osterhoudt Farms	Genoa	375 slaughter cattle and 600 feeder cattle
Hudson Egg Farm Llc	Elbridge	80,720 laying hens and 200 calves
Plainville Turkey Farm, Inc.	Plainville	49,000 turkeys
Plainville Turkey Farm - East	Plainville	96,000 turkeys
Fall View Farms	Trumansburg	46 feeder cattle and 3500 swine
Pine Ridge Farm	Trumansburg	140 heifers
Trengo Farms	Elmira	1000 swine and 200 heifers
Baskin Livestock	Bethany	500 feeder cattle and 190 heifers
Willow Ridge Farms Llc	Alexander	3850 swine
Cy Farms Llc	Elba	150 heifers
Pleasure Acres	Canandaigua	300 feeder cattle and 300 heifers
Adams Henhouse, Inc.	Naples	107,000 laying hens and 120 heifers
Pedersen Farms, Inc.	Seneca Castle	1200 swine and 2500 dairy replacements

Heifer Haven Farms	Stanley	262 young stock
Westervelt's Little Piggy Hill	Watkins Glen	1250 swine and 315 heifers
Gerald Swartley	Waterloo	2000 swine, 100 heifers and 50 calves
Ts Custom Feeders	Trumansburg	300 slaughter cattle and 300 feeder cattle
Swartley Farm	Romulus	2000 swine and 160 heifers
Lamar L. Martin	Romulus	2080 swine and 500 heifers
Wise Farms	Waterloo	50 slaughter cattle
Brad Huffines	Lodi	500 slaughter cattle and 600 feeders
H & B Piggy Farm	Geneva	2000 swine and 216 calves
Harty Hog Farms	Waterloo	4000 swine
Delmar Rutt	Savannah	2140 swine and 200 calves
Wegmans Food Markets, Inc.	Wolcott	850,000 laying hens and 50 young stock
Mike Martin Farm	Savannah	800 swine and 120 heifers
Strzelec Farm	Rushford	337 heifers
Valley View Farm	Whitesville	1000 swine and 190 heifers
Dunnewold Farms	Clymer	150 heifers
Kreher's Poultry Farms	Newstead	600,000 laying hens
Henry's	Harpursville	100 mature dairy and 100 heifers
Argus Acres	Sharon Springs	130 mature dairy and 175 buffaloes
Miner Institute	Chazy	130 mature dairy, 25 horses and 150 heifers
Roy E. Smith	Lafayette	130 mature dairy, 125,000 laying hens and 38 calves
Johnson Farm	Cortland	140 mature dairy and 50 heifers
Burns Family Farm Llc	Hornell	140 mature dairy, 90 heifers and 40 calves
Bozenkill Farms	Delanson	145 mature dairy
Harvest Dairy Farm	Madrid	145 mature dairy, 118 heifers and 24 calves
Weinland Farms	Hobart/Stamford	150 mature dairy and 150 heifers
William E. Olin	Nineveh	150 mature dairy, 75 heifers and 100 calves
Westan Farms	Homer	150 mature dairy
Snavlin Farms	Tully	150 mature dairy and 400 young stock
Lamica's Homestead, Inc.	Constable	151 mature dairy and 300 heifers
Jerald P. Schumacher	Wyoming	152 mature dairy
Dothedale	Valley Falls	155 mature dairy

East Pen View Farm	Penfield	157 mature dairy and 240 dairy replacements
Kenyon Hill Farm	Cambridge	160 mature dairy and 1500 heifers
Hi-Vue Acres	Copenhagen	160 mature dairy
Murray Brook Farms	Leroy	160 mature dairy and 225 heifers
Carl D. Brink Farms	Berkshire	162 mature dairy and 400 heifers
Brian Blair	Deposit	163 mature dairy and 300 young stock
Ormond Farm, Llc	Kennedy	163 mature dairy and 185 heifers
Bennett Bros.	Granger	168 mature dairy and 250 heifers
B & G Cornell Farms	Marathon	169 mature dairy and 70 young stock
Hancor Holsteins	Castorland	169 mature dairy
Willett Farms, Inc.	Hunt	170 mature dairy and 200,000 pullets
Nedrow Farm	Clifton Springs	170 mature dairy
Schoe Acres	Phelps	170 mature dairy, 4 horses and 100 heifers
Reed Haven Farms	Adams Center	175 mature dairy and 130 young stock
Belle Wood Farms	Woodville	175 mature dairy
Dori B's Farm	Depeyster	175 mature dairy and 155 feeders
Donald Smith & Sons	Munnsville	5 slaughter cattle and 175 mature dairy
Marriot Farms	Allen	175 mature dairy
Zielenieski Farms, Inc.	Arcade	175 mature dairy
Spinler Farms	Cassadaga	176 mature dairy
Wolff Farms	Johnsonville	180 mature dairy
Clover Crest Farm	Belleville	180 mature dairy and 130 calves
Kingston Brothers Farm	Madrid	180 mature dairy and 173 heifers
Paradise Valley Farm	Madrid	180 mature dairy and 300 heifers
Steven Durfee	Chittenango	180 mature dairy, 60 heifers and 75 calves
Riverland Dairy Farms	Hume	180 mature dairy, 110 feeders and 80 heifers
Mike Rater Farm	Sherman	180 mature dairy
Mansfield Farm	Cherry Creek	180 mature dairy
Ward Bros.	Castile	180 mature dairy and 230 heifers
Silver Meadows Farm	Silver Springs	180 mature dairy, 12 sheep, 12 horses and 110 heifers
Behan Farm	Caneadea	186 mature dairy
Koval Bros. Dairy	Stillwater	190 mature dairy and 240 heifers
William J. Murphy	Little Falls	190 mature dairy and 300 heifers
Robert Eisenhut Farm	Deansboro	190 mature dairy and 320 heifers

Carlstan Farms	New Woodstock	190 mature dairy, 50 heifers and 30 calves
Switzer Dairy Farm	Trumansburg	190 mature dairy and 170 heifers
Hendee Homestead Farms	Hornell	190 mature dairy
Gilbert Dairy Farm	Rushford	190 mature dairy
Parker Place Llc	Perry	190 mature dairy
Willow Bay	Rushford	192 mature dairy and 450 calves
R. Hidden Valley Farms	Barton	193 mature dairy and 45,000 pullets
Hughson Farm	Jeffersonville	195 mature dairy
Leerkes Farm, Inc.	Ticonderoga	195 mature dairy
Harmonie Farms	Downsville	200 mature dairy
Bar-Brook Farm	Pattersonville	200 mature dairy
Stanton Farm	Schoharie	200 mature dairy
Eureka Farm, Inc.	Cobleskill	200 mature dairy
Dimock Farms	Peru	200 mature dairy and 215 heifers
Sammons Farm	Johnstown	200 mature dairy and 110 heifers
Goodmanor Farm	Fort Ann	200 mature dairy and 250 heifers
Larmon Bros.	Greenwich	200 mature dairy and 30 heifers
Gale Drive Farms	Little Falls	200 mature dairy and 110 heifers
Hilltop Farms	Lowville	200 mature dairy
Keith Bros. Dairy	Waterville	200 mature dairy
Durant Farms	North Lawrence	200 mature dairy and 5 young stock
Beamish Farm	Hammond	200 mature dairy
Martin Farm	Gouverneur	200 mature dairy
Russwick Farms, Inc.	Greene	200 mature dairy and 1040 heifers
Diescher Farms	Homer	200 mature dairy and 700 heifers
Masker Farms	Madison	200 mature dairy
Kab Farms Llc	Canastota	200 mature dairy
Tri-Kay Farms	Owego	200 mature dairy
Fouts Farm	Cortland	200 mature dairy and 125 young stock
Carey Farm	Groton	200 mature dairy and 235 heifers
Dairy Knoll Farms	Groveland	200 mature dairy and 30 feeders
Hickory Lane Farms	Farmington	200 mature dairy and 100 calves
Kenlil Farm	Phelps	200 mature dairy, 40 feeders and 160 heifers
Kempen Land Farm	Albion	200 mature dairy
Dewey Farms	Sherman	200 mature dairy, 175 feeders and 150 heifers
Kidder Farms	Jamestown	200 mature dairy and 300 heifers
Newroyal Farms	Lockport	200 mature dairy and 320 heifers

Daniel Pingrey	Strykersville	200 mature dairy
Robbiehill Dairy Farm Llc	Java Center	200 mature dairy and 220 heifers
Jeff Krenzer/Don Luther	Bliss	200 mature dairy
Armson Farms	Pavilion	200 mature dairy and 100 feeders
Crisvalyn Farms	Berkshire	206 mature dairy and 160 dairy replacement
Sawyer Farm	Ticonderoga	208 mature dairy and 200 young stock
Heritage Hill Farm	Fort Ann	210 mature dairy
Colebrook Dairy	Greenwich	210 mature dairy
Morning Star Farms	Adams	210 mature dairy and 120 young stock
Will-Sho Holstien	King Ferry	210 mature dairy
Littlejohn Farms	Scipio	210 mature dairy
Seeley Brook Farm	Fulton	210 mature dairy and 150 dairy replacement
Hilton Farms	Canandaigua	210 mature dairy
Wagner Farms	Poestenkill	212 mature dairy and 125 dairy replacement
Teriele Dairy	Canton	215 mature dairy and 400 heifers
Rey-Rox Farm	Venice	215 mature dairy and 750 calves
Lew-Lin Farm	Dryden	215 mature dairy and 35 calves
Sommerhoff Farms	Ancramdale	220 mature dairy and 120 heifers
Gem Farms	Castleton	220 mature dairy and 160 heifers
Cds Tillapaugh	Carlisle	220 mature dairy and 300 calves
Gregware Dairy	Chazy	220 mature dairy and 125 heifers
Rusty Creek Partnership	Chazy	220 mature dairy and 412 heifers
Pamtom Farm	Hudson Falls	220 mature dairy and 600 heifers
Gettyvue Farm Llc	Granville	220 mature dairy and 475 heifers
Danube Dairies	Little Falls	220 mature dairy and 100 young stock
Chambers Farms	Heuvelton	220 mature dairy
Indian Camp Farm, Llc	Sherburne	220 mature dairy
Wil-Wood Dairies	Truxton	220 mature dairy
Woodstead Farms	De Ruyter	220 mature dairy
Schweiger Farms	Barton	220 mature dairy
Lew-Lin Farm	Dryden	220 mature dairy
Henry Wood & Sons	Clayton	222 mature dairy
Lavato Farms, Inc.	Mooers	225 mature dairy
Windy Valley Farm	Essex	225 mature dairy and 1230 heifers
Collins Knoll Farm	Chadwicks	225 mature dairy
Five Mile Farms	Lisbon	225 mature dairy
Ceda-Meadow Farm	Lisbon	225 mature dairy and 140 heifers

Don-Lin Farms	Venice Center	225 mature dairy and 100 heifers
Slocolocum Farm	Lansing	225 mature dairy
Pimm's View Farm	Conewango Valley	225 mature dairy
Douglas G./Debra Morrell	Chaffee	225 mature dairy
Holly Rock Farm	Stuyvesant	230 mature dairy
White's Dairy Farm Llc	North Bangor	230 mature dairy
Horton Farm	Cambridge	230 mature dairy and 60 young stock
White Acre Farms	Ogdensburg	230 mature dairy and 200 heifers
Pitcher Farms	Hammond	230 mature dairy
Dewdec Farms, Inc.	Windsor/Deposit	230 mature dairy and 329 young stock
Ross Smith Farms	Munnsville	230 mature dairy
Markham Hollow Farm	Fabias	230 mature dairy and 145 heifers
Post Farms	Oakfield	230 mature dairy and 100 heifers
Odell Farms	Panama	230 mature dairy and 165 heifers
Leuze Farms	Philadelphia	234 mature dairy
Robinson Farm	Owego	234 mature dairy and 15 sheep
Stony Brook, Inc.	Amsterdam	235 mature dairy
Francisco Farms	Belmont	235 mature dairy
Seewalt Brothers	Varysburg	235 mature dairy
Hess Brothers	Hudson	240 mature dairy
Kortright Center Dairies	Bloomville	240 mature dairy
Mapledale Farm	Berlin	240 mature dairy
Douglas E. Brown Farm	Mannsville	240 mature dairy and 350 heifers
Virgil Valley Farms	Ogdensburg	240 mature dairy
Venice Bend Farm	Venice Center	240 mature dairy and 180 young stock
Mead Farm	Owego	240 mature dairy
Anderson Farms	Avon	240 mature dairy
Ro-La Farms	Rexville	240 mature dairy and 220 feeders
Mar-Dan Dairy Farms	Java Center	240 mature dairy
Becker Dairy Farm	Strykersville	240 mature dairy and 200 young stock
Hilts Farms	West Edmeston	241 mature dairy
Lagrange Brothers	Feura Bush	245 mature dairy and 160 heifers
Stephen Butts	Homer	245 mature dairy and 150 heifers
Crossbrook Farm	Middleburgh	249 mature dairy and 150 heifers
Stanton Farms	Coeymans Hollow	250 mature dairy and 200 heifers
Marick Farm	E. Meredith	250 mature dairy and 300 heifers
Glenvue Farm	Fultonville	12 slaughter cattle, 250 mature dairy and 10 feeders
Lyn-J-Flo Farms	Johnstown	250 mature dairy and 100 heifers

Jerry Wood	Mt. Vision	250 mature dairy and 730 heifers
Evergreen Farm	Petersburg	250 mature dairy
Ashline Dairy	Schuyler Falls	250 mature dairy
Hoogeveen Dairy	Stillwater	250 mature dairy
Trinkle Farms	Buskirk	250 mature dairy
Quiet Brook Farm	Hudson Falls	250 mature dairy and 175 heifers
Ford Dairy Farm	Cambridge	250 mature dairy
M&M Farms	Richfield Springs	250 mature dairy
Gremstead Farms, Llc	Rome	250 mature dairy and 4000 heifers
Nar And Mary Green	Waterville	250 mature dairy
Robert Cruikshank	Lisbon	250 mature dairy
Aden Farms	Potsdam	250 mature dairy and 315 heifers
Riverside Farm	Windsor	250 mature dairy and 200 heifers
Long Acres Farm Ii	Columbus	250 mature dairy and 135 heifers
Van Patten Farms	Preble	250 mature dairy
Ddi - Chace Farm	Homer	250 mature dairy
Crescent Crest Dairy, Llc	Cortland	250 mature dairy
Gate House	De Ruyter	250 mature dairy and 230 heifers
Shephard Farms	Cazenovia	250 mature dairy and 10 feeders
Cook Farms	Lansing	250 mature dairy and 200 heifers
Strauss Farms	Woodhall	250 mature dairy, 70 heifers and 61 calves
Maple Lawn Farms, Inc.	Lyons	250 mature dairy, 150 heifers and 100 calves
Vaughan Farms	Pen Yan/Benton Cente	250 mature dairy
Andrews Farms	Randolph	250 mature dairy, 65 heifers and 60 calves
Connies Farm	Allegany	250 mature dairy, 100 heifers and 125 calves
Nickerson Farms	Clymer	250 mature dairy, 250 feeders and 500 heifers
Fontaine Farm Llc	Strykersville	250 mature dairy and 300 dairy replacements
Pingrey Farm 2	Silver Springs	250 mature dairy and 1300 dairy replacements
J. Minns Farms (Castle, No. 9	Stanley	254 mature dairy and 200 heifers
Richland Farm	Salem	255 mature dairy and 150 heifers
Laurin Farms	Chazy	258 mature dairy
Ack-Acres	S. New Berlin	260 mature dairy
Hidden View Farm	Champlain	260 mature dairy and 180 heifers
Florence/James/Brian Swanston	Burke	260 mature dairy

Eaves Dairy Farm	Lowville	260 mature dairy
Suny Morrisville	Morrisville	260 mature dairy and 366 calves
Sun-Rich Farms	Albion	260 mature dairy, 150 heifers and 100 calves
Telaak Farms	Little Valley	260 mature dairy, 400 heifers and 50 calves
Claymount Farms, Inc.	East Aurora	260 mature dairy and 3500 heifers
Mapledale Farms, Inc.	Delevan	261 mature dairy and 800 heifers
R Rocky Top Farm	Ellenburg Depot	265 mature dairy and 1080 heifers
Clark Farm	Clayton	265 mature dairy
Springwater Farms	Canastota	265 mature dairy and 30 heifers
Cooperstown Holstein Corp.	Cooperstown	270 mature dairy and 1340 young stock
Maplehurst Farm Llc	Fabius	270 mature dairy and 1000 heifers
Batzing Farms	Caledonia	270 mature dairy, 208 heifers and 258 calves
Landmark Farms	Clifton Springs	270 mature dairy
Aircove Farm	Bainbridge	271 mature dairy
Sunny Mead Farm	Hillsdale	275 mature dairy and 870 heifers
Fessette's Farm	Plattsburgh	10 slaughter cattle and 275 mature dairy
Clear Echo Farm, Llc	Schuylerville	275 mature dairy, 250 heifers and 184 calves
K&S Associates	Whitney Point /Lisle	275 mature dairy and 200 heifers
Walker Farm	Wayland	275 mature dairy
Gaige Farms, Inc.	Alpine	275 mature dairy and 200 heifers
Cartwright Farms	Angelica	12 slaughter cattle, 275 mature dairy and 6 horses
Blesy Farms	Springville	275 mature dairy and 170 dairy replacement
Zittels Dairy Farm	Hamburg	275 mature dairy and 150 heifers
Langdon Hurst Farms	Copake	276 mature dairy
Lo-Nan Farms Llc	Pine Plains	280 mature dairy and 28 calves
Suny Cobleskill	Cobleskill	20 slaughter cattle, 280 mature dairy, 100 feeders, 4 sheep, 13 horses and 51 heifers
Barber Brothers	Schuylerville	280 mature dairy and 40 horses
Moserdale Farm	Denmark	280 mature dairy and 170 heifers
Lisbon Center Farms	Lisbon	280 mature dairy and 30 calves
Colby Homestead Farms	Spencerport	280 mature dairy and 140 young stock
Seneca Valley Farm	Burdett	280 mature dairy
Chartercrest Farm	Romulus	280 mature dairy, 100 feeders and 300 heifers

Nichols Farm	Farmersville	280 mature dairy
Terra View Cattle, Inc.	Westfield	275 mature dairy and 150 heifers
Rich-A-Lu Farm	Marilla	280 mature dairy and 370 heifers
Breeze Acres	Ellington	283 mature dairy and 114 heifers
Carter Farms, Inc.	Plattsburgh	285 mature dairy and 120 dairy replacement
Five Corners Dairy Farm	New Berlin	285 mature dairy
Power Farms	Cortland	285 mature dairy
Orleans Poverty Hill Farms	Albion	285 mature dairy
Bowhill Farm	Wyoming	285 mature dairy
Covale Holstiens	Preble	288 mature dairy
Three L Farm	Ellenburg Depot	290 mature dairy
Hill-Lee Acres	Peru	290 mature dairy
Dirk Visser & Sons	Watertown	290 mature dairy
Davis Valley Farm	Bliss	290 mature dairy
Reedland Farms	Clifton Springs	292 mature dairy and 136 heifers
Abc Farms	Canastota	298 mature dairy and 320 young stock
Oomsdale Farm	Valatie	300 mature dairy and 40 calves
Eklund Farm Machinery, Inc.	Harpersfield	300 mature dairy and 175 heifers
Eklund Farm Machinery, Inc.	Harpersfield	300 mature dairy and 120 heifers
Evans Illsley	Fonda	300 mature dairy
Klemme Farm	Fort Plain	300 mature dairy and 150 heifers
Natali Farms	Cooperstown	300 mature dairy
Castine Farms	Chazy	300 mature dairy
Killian Dairy Farm	Moreau	300 mature dairy
Welcome Stock Farm, Lp	Schuylerville	300 mature dairy
Kings-Ransom Farm	Schuylerville	300 mature dairy and 135 heifers
Hurd Dairy	Kingsbury	300 mature dairy
Skellkill Farms	Jackson	300 mature dairy
Gorsky Bros. Foothill Farms	Easton	300 mature dairy and 100 heifers
Casler Farm	Winfield	300 mature dairy and 150 feeders
North Harbor Farms	Sackets Harbor	300 mature dairy
T & H Keefer	Black River	300 mature dairy and 250 heifers
Woodruff Farms	Rutland	300 mature dairy and 150 young stock
Kelly Farm	Rensselaer Falls	300 mature dairy and 155 heifers
Lyonshome Farm	Windsor	300 mature dairy
Elkendale Farms Llc	Locke	300 mature dairy
Jerry Bartleson Farm	Cincinnatus	300 mature dairy and 100 young

		stock
Hi Fi Farm	Syracuse	300 mature dairy and 500 young stock
Venture Farms Llc	Tully	300 mature dairy
Fesko Farms, Inc.	Skaneateles	300 mature dairy and 175 dairy replacements
Bensvue Farms	Lansing	150
Vince Deboover Farm	Geneva	300 mature dairy and 140 slaughter cattle
Rhodes Farm	Beaver Dams	300 mature dairy
Brandos Farms	Wellsville	300 mature dairy and 100 heifers
Nobles Farms	South Dayton	300 mature dairy
Kimvale Farms	Falconer	300 mature dairy
Donald Mammoser Farm	Eden	300 mature dairy and 100 heifers
Brant Bros.	Warsaw	300 mature dairy
Luce Dairy Farm	Varysburg	300 mature dairy
Breezy Dairy	Strykersville	300 mature dairy
Logwell Acres Inc.	Pavilion	300 mature dairy
Springtower Dairy Farm	Wyoming	300 mature dairy
Danascara Dairy Farm Ltd.	Fonda	310 mature dairy
Jimali Holsteins	North Bangor	310 mature dairy
Brandy View Farms	Madrid	310 mature dairy and 500 heifers
Palmer Farms	Hornell	310 mature dairy and 750 heifers
D.G.& L. George Farm	Sheldon/Strykersvill	3 slaughter cattle, 310 mature dairy and 5 horses
Brockway Hilltop Farm	Fort Covington	1 slaughter cattle, 312 mature dairy and 30 feeders
Stauffer Farms	Nicholville	315 mature dairy
Schum-Acres & Assoc.	Naples	315 slaughter cattle, 315 mature dairy and 229 heifers
G.C. Acres	East Aurora/Marilla	315 mature dairy
Bates Farm	Cobleskill	316 mature dairy and 350 heifers
Blumer Dairy	Alexander	320 mature dairy and 2 horses
Williamsburg Farm, Llc	Mt. Morris	320 mature dairy and 150 heifers
Samuel Oswald	Penn Yan	320 mature dairy and 170 heifers
Val Dale Farms	Friendship	320 mature dairy and 170 young stock
Kramer Farms	Holland	320 mature dairy and 155 young stock
Church St. Farms	Eden	320 mature dairy and 110 young stock
Gasport View Dairy Farms Inc.	Gasport	320 mature dairy
Brotherhood Farm	Easton	320 mature dairy, 2 horses and

		150 heifers
Coon Brothers Farm	Amenia	325 mature dairy
Bruce Nichols	Ogdensburg	325 mature dairy and 100 heifers
Fishel Farms Llp	Ogdensburg	325 mature dairy and 205 calves
Spruce-Eden Farms	Cortland	325 mature dairy and 350 heifers
Scholten Dairy Farm	Baldwinsville	325 mature dairy and 160 heifers
Lismore Dairy	Arkport	328 mature dairy and 157 dairy replacements
Remillard Farms	Peru	330 mature dairy and 25 heifers
Jordan Farms	Canton	330 mature dairy and 190 heifers
Udderly Better Acres	Leroy	330 mature dairy and 520 heifers
Preischel Farms	Eden	330 mature dairy
Maplewood Farms	Attica	330 mature dairy
Dutch Hollow Farm	Stuyvesant/Kinderhoo	335 mature dairy and 175 heifers
Ziegler Farms	Attica	335 mature dairy and 233 heifers
Hager Farms	Bloomville	340 mature dairy and 500 heifers
Wm. Hanehan And Sons	Saratoga Springs	340 mature dairy and 100 heifers
Black Creek Valley Farm, Inc.	Salem	340 mature dairy
Michael Burger	Adams	340 mature dairy and 270 heifers
Lightland Farms	Gorham	340 mature dairy
William Gabel	Lawtons	340 mature dairy
Cl Winter & Sons	Perry	340 mature dairy
Veri Farms	Gasport	343 mature dairy, 6 swine, 322 heifers and 137 calves
Lawrence Doody & Sons	Otisco	345 mature dairy and 700 heifers
Carsada Farms	Malone	350 mature dairy and 550 young stock
Metcalf Farms	Constable	350 mature dairy and 170 heifers
Eildon Tweed Farm	West Charlton	350 mature dairy
Tiashoke Farms, Llc	Cambridge	350 mature dairy and 170 heifers
Maple Leaf Farm	Richfield Springs	350 mature dairy and 4300 heifers
Sprague's Dairy Farm	Fort Plain	350 mature dairy and 760 heifers
Russwick Farms, Inc.	Port Crane	350 mature dairy and 300 heifers
Mcjarr Farms	King Fery	350 mature dairy
Harmony Haven Farm	Sherburne	350 mature dairy
Jerry-Dell Farm	Dryden	350 mature dairy
D. Michael Hourigan	Syracuse	350 mature dairy and 318 heifers
Cottonwood Farms	Pavilion	350 mature dairy and 15 calves
Daniel Bridge	Elba	350 mature dairy, 250 heifers and 170 calves
Hathorn Farms	Stanley	350 mature dairy, 97 heifers and 216 calves

Harford Teaching & Research Center	Dryden	465 slaughter cattle, 352 mature dairy, 350 sheep, 700 lambs and 1600 heifers
Harper Farms	Savannah	352 mature dairy and 2 horses
A. Ooms & Sons	Kinderhook	360 mature dairy and 250 calves
Windsong Farms	Rodman	360 mature dairy
Finndale Farms	Holland Patent	360 mature dairy and 2000 heifers
Gotham Farms	Hermon	360 mature dairy
Mc Bride Farms	Perry	360 mature dairy, 300 heifers and 200 calves
Willink Farms Llc	Clymer	360 mature dairy, 35 heifers and 45 calves
Dream Maker Dairy	Cowlesville	360 mature dairy and 3600 heifers
Bartel Farms	Ghent	361 mature dairy and 600 heifers
Bainbridge Family Farm	Almond	365 mature dairy and 225 heifers
Flack Farms	Lisbon	370 mature dairy and 270 heifers
Ripley Farms	Moravia	370 mature dairy and 85 heifers
Posson Farms	Norwich	375 mature dairy and 450 young stock
D & D Dairy	Scottsville	375 mature dairy
Smith's Stock Farms, Inc.	Hornell	375 mature dairy and 600 dairy replacements
Rw Taylor & Sons, Inc.	Wyoming	375 mature dairy and 225 heifers
Waterpoint Farms, Inc.	Springfield Center	380 mature dairy and 900 heifers
Murrock Farms	Watertown	380 mature dairy and 20 calves
R & D Crowell Farms, Llc	South Dayton	380 mature dairy and 150 heifers
Hemdale Farms	Seneca Castle	385 mature dairy
Dykeman & Sons, Inc.	Fultonville	390 mature dairy and 636 heifers
Fair Weather Farms	New Lebanon	400 mature dairy and 15 swine
Veit Farms	Fort Plain	400 mature dairy and 1000 young stock
Lamberton Farms	Mooers Forks	400 mature dairy
Red Top Farm	Granville	400 mature dairy, 240 heifers and 75 calves
Entwistle	Frankfort	400 mature dairy and 204 heifers
Vaill Bros.	Vernon	400 mature dairy and 300 heifers
Smith Acres	South Otselic	400 mature dairy and 200 heifers
Marshman Farms	Oxford	400 mature dairy and 110 heifers
Preble Hill Farm	Preble	400 mature dairy and 150 calves
Whey Street Dairy	Cuyler	400 mature dairy and 180 heifers
J-Rob Farms, Inc.	Leroy	400 mature dairy
Canoga Spring Farms	Seneca Falls	400 mature dairy and 220 heifers
Lent Hill Dairy	Cohocton	400 mature dairy and 160 calves

Car-Bu Farms	Delevan	400 mature dairy
Newton Brothers	Sinclairville	400 mature dairy
Dutch Road Dairy Farm	Findley Lake	400 mature dairy, 84 heifers and 59 calves
Carlson Farms	Kennedy	400 mature dairy and 300 heifers
Outback Dairy	Varysburg	400 mature dairy and 100 cows
Cornell-Crest Llc	Perry	400 mature dairy
Edelweiss Farms #3	Gainesville	400 mature dairy and 26,000 pullets
Halo Farms	Perry	400 mature dairy
Woods Hill Farms, Llc	Turin	405 mature dairy and 320 heifers
Eklund Farm Machinery, Inc.	Harpersfield	410 mature dairy and 160 heifers
Birch Creek	Woodville	410 mature dairy and 210 heifers
Forbes Farm	Cortland	410 mature dairy and 150 heifers
Millbrook Farm	Freeville/Groton	410 mature dairy and 500 heifers
Frank/Diane Schreiber	Castile	410 mature dairy and 324 heifers
Big Green Farms, Inc.	Salem	412 mature dairy and 900 heifers
Thornapple Farms	Leicester	417 mature dairy and 550 heifers
Hildene Farms Inc.	Pavilion	420 mature dairy and 399 heifers
Hale Dutch Farm	Clifton Springs	420 mature dairy
K-Way Farms	Palmyra	50 slaughter cattle, 420 mature dairy and 125 heifers
Bray Farms	Arcade	420 mature dairy and 95 heifers
Hamlet Farm Llc	Piffard	425 mature dairy and 520 heifers
Nickerson Farms	Sherman	425 mature dairy, 400 feeders and 1184 dairy replacements
Highland Farms	Wyoming	428 mature dairy
Currie Valley Dairy Llc	Tully	430 mature dairy and 340 heifers
Hubert W. Stein & Sons	Caledonia	430 mature dairy and 70 heifers
Marzolf Dairy Farm, Inc.	Holland	430 mature dairy, 124 heifers and 215 calves
Bergen Farms	Odessa	435 mature dairy
Ridge View Farms	Champlain	440 mature dairy
Green Hill Farm	Scipio	440 mature dairy, 135 heifers and 85 calves
Pleasant Valley Farms	Deruyter	448 mature dairy
Locust Lawn Farm	Elbridge	448 mature dairy, 100 heifers and 100 calves
J & J Mill Creek Farm, Inc.	Stuyvesant	450 mature dairy and 200 calves
Monica Farms	Bangor	450 mature dairy
Ideal Dairy Farms	Hudson Falls	450 mature dairy
Hillcrest Farms	Woodville	450 mature dairy

Leu Maple Lane Dairy Farms	Marietta	450 mature dairy
Knapps Greenwood Farm	Fabius	448 mature dairy and 200 heifers
T. Joseph Swyers	Dansville	450 mature dairy
Ernest/Tom Gates	York	450 mature dairy and 23 swine
Scanlon Farms	Addison	450 mature dairy
Schwab Dairy	Delevan	450 mature dairy
Phalen Farms	Stanley	456 mature dairy
Chambers Valley Farm, Inc.	Salem	461 mature dairy and 2000 wean pigs
Cha-Liz Farms	West Chazy	465 mature dairy
Creek Acres Farm	Amsterdam	470 mature dairy
Trainer Farm	Chateaugay	470 mature dairy and 400 heifers
Royal-J-Acres Llc	Ogdensburg	470 mature dairy and 400 young stock
Bubbins Farm Llc	Plattsburgh	475 mature dairy
Zenga Farms	Adams	470 mature dairy and 180 heifers
Brabant Farm	Verona	480 mature dairy
Allenwaite Farms, Inc.	Schaghticoke	485 mature dairy and 100 heifers
Leduc's Green Acres	Champlain	490 mature dairy and 350 young stock
Pagen Farms, Inc.	Leroy	490 mature dairy and 150 heifers
Ronald & David Adams Dairy	Randolph	490 mature dairy and 300 feeders
Carl Youngers Farm, Inc.	Bliss	490 mature dairy
Hy Hope Farms, Inc.	Stafford	491 mature dairy
George W. Blowers & Son	Johnstown	500 mature dairy
Hemlock Valley Farm	Milford	500 mature dairy
Badlands Dairy	Evans Mills	500 mature dairy
Giezen Bros.	Lisle	500 mature dairy and 100 heifers
White Eagle Farms	Hamilton	500 mature dairy and 200 heifers
Devine Farms	Canastota	500 mature dairy
Ralph Volles Farms	Marietta	500 mature dairy and 420 feeders
Reyncrest Farms, Inc.	Corfu	500 mature dairy
Kennedy Dairy Farm, Inc.	Groveland	500 mature dairy
Mulligan Farm, Inc.	Avon	500 mature dairy, 10 sheep, 5 horses and 10 laying hens
David L. Covert	Prattsburg	500 mature dairy and 570 young stock
Handy Farms, Inc.	East Aurora	500 mature dairy and 250,000 pullets
Shafer Farms	Middleport	500 mature dairy and 500 heifers
Mccormick's Dairy	Bliss	500 mature dairy

Burke Hill Farm Llc	Perry	500 mature dairy and 250 heifers
Friendly Acres Farm Llc	Attica	500 mature dairy and 2 horses
Sivue Dairy Farms	North Java	500 mature dairy
Lee/Paul Perl	Sheldon	500 mature dairy and 200 young stock
Leo Dickson & Sons	Bath	501 mature dairy and 1800 heifers
Mowacres Farm Ii, Llc	Leroy	510 mature dairy
Frazee Farms	Fabius	515 mature dairy and 96 young stock
Fessenden Dairy, Llc	King Ferry	520 mature dairy and 115 heifers
Czapeczka Bros., Inc.	Corfu	520 mature dairy
Dziedzic Farms	Bliss	540 mature dairy and 300 heifers
Vincent Bilow	Malone	550 mature dairy, 75 heifers and 80 calves
Crm	Little Falls	550 mature dairy, 75 heifers and 75 calves
Sheland Farms	Adams	550 mature dairy and 150 heifers
Gillette Creek Farms	Evans Mills	550 mature dairy, 150 heifers and 40 calves
Eastview Farms Llc	Fabius	550 mature dairy and 330 heifers
Edgewood Farms	Groveland	550 mature dairy
El-Vi Farms	Newark	550 mature dairy and 200 heifers
Landmark Acres	Dewittville	550 mature dairy
Hanehan Family Dairy Llc	Stillwater	565 mature dairy
J. Deboover Farms	Phelps	568 mature dairy
Herrington Farms, Inc.	Troy	580 mature dairy
Pankow Farm	Castile	580 mature dairy
Locust Hill Farm	Mannsville	585 mature dairy
Sunburst Acres	York	588 mature dairy
Ashland Farm	Aurora	590 mature dairy, 5 horses and 640 heifers
Aa Dairy	Candor	500 mature dairy
Wil Roc Farms	Kinderhook	600 mature dairy
Rovers Farm, Inc.	Chazy	600 mature dairy and 20 heifers
Butterville Farms	Adams	600 mature dairy
Joseph Mcgraw	North Lawrence	600 mature dairy
Pine Hollow Dairy	Locke	600 mature dairy and 275 heifers
Patterson Farms	Auburn	600 mature dairy
Springbrook Farms	Scipio Center	600 mature dairy
Aldrich Farm	Cincinnatus	600 mature dairy
Mcmahon's E-Z Acres	Homer	600 mature dairy
Millbrook Farms	Hubbardsville	600 mature dairy, 37 heifers, 40 calves and 45 yearlings

Wonderview Farm	Montour	600 mature dairy
Smith Farms	Clyde	600 mature dairy and 250 heifers
Hidden Valley Farms	South Dayton	600 mature dairy and 120 heifers
Phelps Dairy	Castile	600 mature dairy and 200 heifers
Flint Farm	Warsaw	600 mature dairy
Mammoser Farms, Inc.	Eden	620 mature dairy
Stein Farms Llc	Leroy	630 mature dairy
Miller's Son Shine Acres, Inc.	Corfu	630 mature dairy
Gonyo Brothers & Sons Dairy Fa	Mooers	640 mature dairy
Eastman Farms	Ellisburg	640 mature dairy and 400 heifers
Roll-N-View	Nunda	640 mature dairy
Spring Hill Dairy	Bliss	640 mature dairy
Woody Hill Farms, Inc.	Salem	650 mature dairy and 158 heifers
Lawnhurst Farms	Stanley	650 mature dairy
Will-O-Crest Farms	Clifton Springs	650 mature dairy and 170 young stock
Norton Farms, Inc.	Elba	674 mature dairy and 550 heifers
Ziegler Dairy/Maplewood Dairy	Attica	680 mature dairy
Emerling Farms, Llc	Perry	680 mature dairy and 590 feeders
River-Breeze Farm	Chase Mills	700 mature dairy and 500 heifers
Corscadden Family Farm	Richville	700 mature dairy and 200 heifers
Mandale Farm	Auburn	700 mature dairy
Beck Farms, Lp	Freeville	700 mature dairy
Edelweiss Farms, Inc.	Freedom	700 mature dairy
True Farms, Inc.	Perry	700 mature dairy, 3 swine, 1 horse
Hardie Farms Inc.	Lansing	710 mature dairy and 210,000 pullets
Matlink	Clymer	710 mature dairy and 230 heifers
Mccollum Farms	Gasport	720 mature dairy and 750 heifers
C & J Dairy, Inc.	Delevan	740 mature dairy and 110 feeders
Doubledale Farm	Ellisburg	750 mature dairy
Hi-Hope Farm Realty Associates	Ellisburg	750 mature dairy
Tug Edge Dairy	Adams	750 mature dairy
Allen Farms	Scipio Center	750 mature dairy
Elmer Richards & Sons	Skaneateles	750 mature dairy and 165 young stock
Mccormick Dairy	Alexander	750 mature dairy, 284 heifers and 229 calves
Chaffee Farms	Barker	750 mature dairy

Old Acre Farm	Perry	787 mature dairy and 600 heifers
Barbland Farms	Fabius	790 mature dairy
Beavers Dairy Farm	Randolph	800 mature dairy
Phillips Family Farm, Inc.	Brant	800 mature dairy, 20 heifers and 60 calves
Greenwood Dairy Inc./Greenwood	Potsdam (T)	810 mature dairy and 980 heifers
Berkshire Valley Holsteins	Copake Falls	840 mature dairy and 100 dairy replacements
Landview Farm Llc	White Creek	840 mature dairy and 520 heifers
Bonna Terra Farms	Bloomfield	840 mature dairy and 180 young stock
Dueppengiesser Dairy Co.	Perry	840 mature dairy and 210 young stock
Sunny Knoll Farms	Perry	840 mature dairy
Van Slyke's Dairy Farm Llc	Portageville	844 mature dairy and 150 heifers
Demko Farms, Inc.	Lowville	850 mature dairy and 200 calves
Aurora Dairy Farms, Llc	Aurora	850 mature dairy and 230 heifers
John Hourigan	Elbridge	300 slaughter cattle, 850 mature dairy and 300 feeders
Lawnel Farms, Inc.	Piffard	850 mature dairy and 180 heifers
Skyline Farms Llc	Cameron	0
Peterson Farms	Sherman	850 mature dairy, 150 heifers and 50 calves
Swiss Valley Farms	Warsaw	850 mature dairy and 240 young stock
East View Farms	East Bethany	900 mature dairy, 350 heifers and 15 calves
Zuber Farms	Byron	940 mature dairy
Lamb Farms, Inc. (Farm #2)	Oakfield	950 mature dairy and 75 heifers
Offhaus Farms Inc	Batavia	950 mature dairy
Table Rock Farm, Inc.	Castile	964 mature dairy and 148 heifers
Danielewicz Dairy Farm, Inc.	Wilson	989 mature dairy and 1800 heifers
Walker Farms Llc	Fort Ann	1000 mature dairy and 639 heifers
Curtin Dairy	Cassville	1000 mature dairy
The Roach Farm	Scipio Center	1000 mature dairy, 800 feeders and 900 heifers
Dairy Development	Homer	1000 mature dairy and 150 calves
Twin Birch Dairy, Llc	Skaneateles	1000 mature dairy and 300 calves
John/Mark/Maureen J. Torrey	Elba	1050 mature dairy

Merrell Farms, Inc.	Wolcott	1050 mature dairy, 400 heifers and 400 calves
Tillotson's Holsteins	Wyoming	1100 mature dairy
Plato Brook Farms, Llc	Arcade	1100 mature dairy and 10 calves
Norco Farms	Hopkinton	1120 mature dairy, 50 heifers and 60 calves
Ebs Assoc., Llc - Dba Eluree F	Slate Hill	1130 mature dairy
Noblehurst Farms Inc.	Pavilion	1150 mature dairy and 150 heifers
Odyssey Farm/South, Inc.	Copake	1200 mature dairy, 140 heifers and 200 calves
Adirondack Farms Llc	Peru, Ny	1200 mature dairy and 350 heifers
Spruce Haven Farm Lp	Union Springs	1200 mature dairy and 400 heifers
Willow Bend Farm	Manchester	1200 mature dairy and 300 calves
Fitch Farms, Inc.	Perry	1200 mature dairy and 150 heifers
Oakwood Dairy Llc	Auburn/Aurelius	1220 mature dairy and 488 heifers
Palmer Farms	Holland	1250 mature dairy and 140 dairy replacements
Porterdale Farms, Inc.	Adams Center	1300 mature dairy, 350 heifers and 375 calves
Mt. Morris Dairy Farms, Inc.	Mt. Morris	1350 mature dairy, 200 heifers and 200 yearlings
Southview Farms Inc.	Castile	1350 mature dairy and 500 young stock
Home Farm/County Farm/Henry's/	Harpursville/Bainbri	1400 mature dairy and 75 calves
Dutch Hill Llc	Canastota	1400 mature dairy
Gardeau Crest	Perry	1400 mature dairy and 50 calves
Southview Farms Inc.	Dansville	1450 mature dairy and 158 dairy replacements
Home Farm	Harpursville	1500 mature dairy
Coyne Farms, Inc.	Avon	1500 mature dairy, 150 heifers and 50 calves
Donnan Farms, Inc.	York	1500 mature dairy
Mapleview Dairy Llc	Madrid	1600 mature dairy and 175 young stock
Broughton Farm	Silver Springs	1600 mature dairy and 840 heifers
Marks Farms	Lowville	1700 mature dairy and 292 heifers
Lor-Rob Dairy Farm	East Bethany	1700 mature dairy and 155 heifers
Papas Dairy, Llc	Malone	1800 mature dairy and 250 heifers
Lamb Farms, Inc. (Farm #1)	Oakfield	1800 mature dairy and 350 heifers
Venice View Dairy, Inc.	Scipio	1840 mature dairy and 200 heifers
Strzelec Farm	Cuba	2000 mature dairy and 1350

		heifers
Boxler Dairy Farm	Varysburg	2240 mature dairy and 260 heifers
Milk Train, Inc.	Sprakers	2500 mature dairy
Willet Dairy L.P.	Locke	4000 mature dairy

REFERENCES

Abanades, S. and Flamant, G., 2005. Production of hydrogen by thermal methane splitting in a nozzle-type laboratory-scale solar reactor. International Journal of Hydrogen Energy 30(8): 843 – 853.

Abdel-Aal, H.K. and Shalabi, M.A., 1996. Noncatalytic partial oxidation of sour natural gas versus catalytic steam reforming of sweet natural gas. Industrial and Engineering Chemistry Research 35: 1785 – 1787.

Abdel-Aal, H.K., Shalabi, M.A., Al-Harbi, D.K. and Hakeem, T., 1999. Simulation of the direct production of synthesis gas from sour natural gas by noncatalytic partial oxidation (NCPO): thermodynamics and stoichiometry. Industrial and Engineering Chemistry Research 38: 1069 – 1074.

Ahmad, G.E. and El Shenawy, E.T., 2005. Optimized photovoltiac system for hydrogen production. Renewable energy. Article in press.

Ahmed, S. and Krumpelt, M., 2001. Hydrogen from hydrocarbon fuels for fuel cells. International Journal of Hydrogen Energy 26(4): 291 – 301.

ASABE American Society of Agricultural and Biological Engineers Standard D384.2 Mar 2005, Manure Production and Characteristics.

Ashcroft, A.T., Cheetham, A.K., Foord, J.S., Green, M.L.H., Grey, C.P., Murrell, A.J. and Vernon, P.D.F., 1990. Selective oxidation of methane to synthesis gas using transition metal catalysts. Nature 344 (6264): 319 – 321.

Ashcroft, A.T., Cheetham, A.K., Green, M.L.H. and Vernon, P.D.F., 1992. Partial oxidation of methane to synthesis gas using carbon dioxide. Nature 352: 225 – 226.

Batzias, F.A., Sidiras, D.K. and Spyrou, E.K., 2005. Evaluating livestock manures for biogas production: a GIS based method. Renewable Energy 30: 1162 – 1176.

Bharadwaj, S.S. and Schmidt, L.D., 1994. Synthesis gas formation by catalytic oxidation of methane in fluidized bed reactors. International Journal of Hydrogen Energy 146(1): 11 – 21.

Bitter, J.H., Seshan, K. and Lercher, J.A., 1997. The state of zirconia supported platinum catalysts for CO_2/CH_4 reforming. Journal of Catalysis 171: 279 – 286.

Bitter, J.H., Seshan, K. and Lercher, J.A., 1998. Mono and bifunctional pathways of CO_2/CH_4 reforming over Pt and Rh based catalysts. Journal of Catalysis 176: 93 – 101.

BLS, 2008. US Bureau of Labor Statistics' Consumer Price Index Inflation Calculator. Available online at http://data.bls.gov/cgi-bin/cpicalc.pl. Last accessed on Mar 5 2008.

Brown, L.F., A comparative study of fuels for on-board hydrogen production for fuel-cell-powered automobiles. International Journal of Hydrogen Energy 26: 381 – 397.

Buxbaum, R.E., 2004. REB Research and Consulting. Personal communication.

Calcott, T.G. and Deague, T.K., 1977. US Patent No. 4042344: Process for the production of gaseous mixtures. Issued Aug 16, 1977.

Chapman, D., 2000. Pp 59 *in* Environmental economics: Theory, application, and policy. Addison-Wesley, Reading, Mass.

Chan, S.H. and Wang, S.M., 2000. Thermodynamic analysis of natural-gas fuel processing for fuel cell applications. International Journal of Hydrogen Energy 25(5): 441 – 449.

Chawla, S.K. and Ghosh, K.K., 1992. Thermodynamic analysis of hydrogen production from biogas for phosphoric acid fuel cell. International Journal of Hydrogen Energy 17: 405 – 412.

Chemical and Engineering News, 2005. Vol 83, No 28; Available online at: http://pubs.acs.org/cen/coverstory/83/i28/tables/US_inorganics.csv last accessed on April 17, 2007.

Chiesa, P., Consonni, S., Kreutz, T. and Williams, R., 2005. Co-production of hydrogen, electricity and CO_2 from coal with commercially ready technology. Part A: Performance and emissions. International Journal of Hydrogen Energy 30 (7): 747 – 767.

Cho, W., Lee, S-H., Ju, W-S., Baek, Y. and Lee, J.K., 2004. Conversion of natural gas to hydrogen and carbon black by plasma and application of plasma carbon black. Catalysis Today 98(4): 633 – 638.

Choudhary, V.R., Rajput, A.M. and Prabhakar, B., 1995. Energy efficient methane-to-syngas conversion with low H_2/CO ratio by simultaneous catalytic reactions of methane with carbon dioxide and oxygen. Catalysis Letters 32(3-4): 391 – 396.

Choudhary, V.R. and Rajput, A.M., 1996. Simultaneous carbon dioxide and steam reforming of methane to syngas over NiO-CaO catalyst. Industrial and Engineering Chemistry Research 35(11): 3934 – 3939.

Choudhary, V.R., Uphade, B.S. and Belhekar, A.A., 1996. Oxidative conversion of methane to syngas over LaNiO3 perovskite with or without simultaneous steam and CO_2 reforming reactions: influence of partial substitution of La and Ni. Journal of Catalysis 163(2): 312 – 318.

Choudhary, V.R., Uphade, B.S. and Mamman, A.S., 1998. Simultaneous steam and CO_2 reforming of methane to syngas over NiO/MgO/SA-5205 in the presence and absence of oxygen. Applied Catalysis A: General 168(1): 33 – 46.

Choudhary, V.R., Mondal, K.C., Mamman, A.S. and Joshi, U.A., 2005. Carbon-free dry reforming of methane to syngas over NdCoO3 perovskite-type mixed metal oxide catalyst. Catalysis Letters 100(3-4): 271 – 276.

Choudhary, V.R., Mondal, K.C., and Choudhary, T.V., 2006. Oxy-CO_2 reforming of methane to syngas over CoOx/CeO2/SA-5205 catalyst. Energy and Fuels 20(5): 1753 – 1756.

Chow, J., Kopp, R.J. and Portney, P.R., 2003. Energy resources and global development. Science 302: 1528 – 1531.

Christensen, T.S. and Primdahl, I.I., 1994. Improved syngas production using autothermal reforming. Hydrocarbon processing 73(3): 39 – 46.

Chynoweth, D.P., 1987. Overview. In: Chynoweth, D.P. and R. Isaacson (eds). Anaerobic Digestion of Biomass. Elsevier Applied Science: New York. pp 1 – 14.

Claridge, J.B., Green, M.L.H., Tsang, S.C., York, A.P.E., Ashcroft, A.T. and Battle, P.D., 1993. A study of carbon deposition on catalysts during the partial oxidation of methane to synthesis gas. Catalysis Letters 22 (4): 299 – 305.

Clery, D., 2005. Nuclear industry dares to dream of a new dawn. Science 309: 1172 – 1175.

Colella, W.G., Jacobson, M.Z. and Golden, D.M., 2005. Switching to a U.S. hydrogen fuel cell vehicle fleet: The resultant change in emissions, energy use, and greenhouse gases. Journal of Power Sources 150: 150 – 181.

Crabtree, G.W., Dresselhaus, M.S. and Buchanan, M.V., 2004. The hydrogen economy. Physics Today 57 (12): 39 – 44.

da Silva, C.F., Ishikawa, T., Santos, S., Alves Jr., C. and Martinelli, A.E., 2006. Production of hydrogen from methane using pulsed plasma and simultaneous storage in titanium sheet. International Journal of Hydrogen Energy 31(1): 49 – 54.

Dagnall, S., Hill, J. and Pegg, D., 2000. Resource mapping and analysis of farm livestock manures – assessing the opportunities for biomass-to-energy schemes. Bioresource Technology 71: 225 – 234.

Dahl, J.K., Tamburini, J., Weimer, A.W., Lewandowski, A., Pitts, R. and Bingham, C., 2001. Solar-thermal processing of methane to produce hydrogen and syngas. Energy and Fuels 15: 1227 – 1232.

Dahl, J.K., Weimer, A.W., Lewandowski, A., Bingham, C., Bruetsch, F. and Steinfeld, A., 2004. Dry reforming of methane using a solar-thermal aerosol flow reactor. Industrial and Engineering Chemistry Research 43(18): 5489 – 5495.

Dias, J.A.C. and Assaf, J.M., 2004. Autothermal reforming of methane over Ni/γ-Al2O3 catalysts: the enhancement effect of small quantities of noble metals. Journal of Power Sources 130: 106 – 110.

DOE, 2005a. US Department of Energy, Office of Energy Efficiency and Renewable Energy's Hydrogen, Fuel Cells and Infrastructure Technologies Program. Available online at:
http://www.eere.energy.gov/hydrogenandfuelcells/production/current_technology.html last accessed on Oct 22, 2006.

DOE, 2005b. US Department of Energy, Office of Energy Efficiency and Renewable Energy's FreedomCAR and Vehicle Technologies Program. Available online at:
http://www1.eere.energy.gov/vehiclesandfuels/facts/favorites/fcvt_fotw205.html last accessed on Oct 22, 2006.

DOE, 2006. US Department of Energy, Office of Energy Efficiency and Renewable Energy's Hydrogen, Fuel Cells and Infrastructure technologies program. Available online at:
http://www1.eere.energy.gov/hydrogenandfuelcells/presidents_initiative.html. Last accessed on Mar 15, 2006.

DOE, 2008a. US Department of Energy, Hydrogen Analysis Resource Center. Available online at:
http://hydrogen.pnl.gov/cocoon/morf/hydrogen/site_specific/fuel_heating_calculator. Last accessed on Mar 5 2008.

DOE, 2008b. Energy Information Administration, Form EIA-826, "Monthly Electric Sales and Revenue Report with State Distributions Report." Available online at:
http://www.eia.doe.gov/cneaf/electricity/epm/table5_6_b.html. Last accessed on Apr 10 2008.

DOE, 2008c. Energy Information Administration, Price of Natural Gas Sold to Commercial Consumers in New York (Dollars per Thousand Cubic Feet). Available

online at: http://tonto.eia.doe.gov/dnav/ng/ng_pri_sum_dcu_SNY_a.htm. Last accessed on May 24 2008.

DOE, 2008d. Hydrogen Analysis Resource Center. Available online at: http://hydrogen.pnl.gov/filedownloads/hydrogen/datasheets/merchant_hydrogen_producers.xls. Last accessed on Apr 15 2008.

Duerr, M., Gair, S., Cruden, A. and McDonald, J., 2007. Hydrogen and electrical energy from organic waste treatment. International Journal of Hydrogen Energy 32: 705 – 709.

Dunker, A.M., Kumar, S. and Mulawa, P.A., 2006. Production of hydrogen by thermal decomposition of methane in a fluidized-bed reactor – Effects of catalyst, temperature, and residence time. International Journal of Hydrogen Energy 31(4): 473 – 484.

Dunker, A.M. and Ortmann, J.P., 2006. Kinetic modeling of hydrogen production by thermal decomposition of methane. International Journal of Hydrogen Energy 31(14): 1989 – 1998.

Dyer, P.N., Richards, R.E., Russek, S.L. and Taylor, D.M., 2000. Ion transport membrane technology for oxygen separation and syngas production. Solid State Ionics 134(1-2): 21 – 33.

Effendi, A., Hellgardt, K., Zhang, Z.-G. and Yoshida, T., 2005. Optimising H_2 production from model biogas via combined steam reforming and CO shift reactions. Fuel 84 (7-8): 869 – 874.

Elam, C.C., Gregoire Padró, C.E., Sandrock, G., Luzzi, A., Lindblad, P. and Hagen, E.F., 2003. Realizing the hydrogen future: the International Energy Agency's efforts to advance hydrogen energy technologies. International Journal of Hydrogen Energy 28: 601 – 607.

EPA, 2001. Emissions from animal feeding operations. Draft paper. Available online at: http://www.epa.gov/ttn/chief/ap42/ch09/draft/draftanimalfeed.pdf. Last accessed on Feb 20 2007.

EPA, 2003a. Region 5 Water: Water Quality Impacts. Available online at http://www.epa.gov/r5water/npdestek/npdcafowaterqualityimpacts.htm. Last accessed on April 16 2007.

EPA, 2003b. Air Emissions from Animal Feeding Operations: Current Knowledge, Future Needs. National Academies Press: Washington, DC. 286 pp.

EPA, 2006. AgSTAR Digest. AgSTAR Digesters Continue Accelerating in the U.S.

Livestock Market. Available online at: http://www.epa.gov/agstar/pdf/2006digest.pdf Last accessed on Feb 20 2007.

EPA, 2007a. Inventory of US Greenhouse Gas Emissions and Sinks: 1990 – 2005. Available online at http://epa.gov/climatechange/emissions/downloads06/07CR.pdf. Last accessed on April 16 2007.

EPA, 2007b. AgSTAR Program. Market Opportunities for Biogas Recovery Systems: a Guide to Identifying Candidates for On-Farm and Centralized Systems (page 1). Available online at: http://www.epa.gov/agstar/pdf/biogas%20recovery%20systems_screenres.pdf Last accessed Feb 20 2007.

Farrauto, R., Hwang, S., Shore, L., Ruettinger, W., Lampert, J., Giroux, T., Liu, Y. and Ilinich, O., 2003. New material needs for hydrocarbon fuel processing: generating hydrogen for the PEM fuel cell. Annual Review of Materials Research 33: 1 – 27.

Ferreira-Aparicio, P., Benito, M., Kouachi, K. and Menad, S., 2005. Catalysis in membrane reformers: a high-performance catalytic system for hydrogen production from methane. Journal of Catalysis 231 (2): 331 – 343.

FRB, 2008. Federal Reserve Bank of St. Louis. Data available online at http://research.stlouisfed.org/fred2/data/EXJPUS.txt. Last accessed Mar 5 2008.

Freni, S. and Cavallaro, S., 1999. Catalytic partial oxidation of methane in a molten carbonate fuel cell. International Journal of Hydrogen Energy 24(1): 75 – 82.

Gadalla, A.M. and Bower, B., 1988. The role of catalyst support on the activity of nickel for reforming methane with CO_2. Chemical Engineering Science 43(11): 3049 – 3062.

Gaudernack, B. and Lynum, S., 1998. Hydrogen from natural gas without release of CO_2 to the atmosphere. International Journal of Hydrogen Energy 23(12): 1087 – 1093.

Goldstein, N., 2007a. Digester developer taps natural gas markets. BioCycle 48(9): 40 – 42.

Goldstein, N., 2007b. Adding value to on-farm digesters. BioCycle 48(9): 46 – 50.

Gooch, C.A., S.F. Inglis and P.E. Wright, 2007. Biogas distributed generation systems evaluation and technology transfer. New York State Energy Research and Development Authority Project No. 6597.

Gryaznov, V., 2000. Metal containing membranes for the production of ultrapure

hydrogen and the recovery of hydrogen isotopes. Separation and Purification Methods 29(2): 171 – 187.

Hallenbeck, P.C. and Benemann, J.R., 2002. Biological hydrogen production; fundamentals and limiting processes. International Journal of Hydrogen Energy 27: 1185 – 1193.

Hickman, D.A. and Schmidt, L.D., 1993. Production of syngas by direct catalytic oxidation of methane. Science 259 (5093): 343 – 346.

Hirsch, D., Epstein, M. and Steinfeld, A., 2001. The solar thermal decarbonization of natural gas. International Journal of Hydrogen Energy 26(10): 1023 – 1033.

Hirsch, D. and Steinfeld, A., 2004a. Radiative transfer in a solar chemical reactor for the co-production of hydrogen and carbon by thermal decomposition of methane. Chemical Engineering Science 59(24): 5771 – 5778.

Hirsch, D. and Steinfeld, A., 2004b. Solar hydrogen production by thermal decomposition of natural gas using a vortex-flow reactor. International Journal of Hydrogen Energy 29(1): 47 – 55.

Hjort-Gregersen, K., Christensen, J., Al. Seadi, T., Møller, H.B., Sommer, S.G., Birkmose, T.S., Nielsen, L.H., Asselt, B. v, Rabier, F., Warnant, G., Couturier, C., Alvarez, J.M., Zafiris, C. and Heslop, V., 2007. Promotion of Biogas for Electricity and Heat Production in EU Countries (PROBIOGAS). Assessed economic results from 6 European case studies, barriers and recommendations. In: The Future of Biogas in Europe III, European Biogas workshop and study tour, held in University of Southern Denmark, Esbjerg, Denmark during 14 – 16 June 2007, (pp 20 - 30).

Hoang, D.L., Chan, S.H. and Ding, O.L., 2006. Hydrogen production for fuel cells by autothermal reforming of methane over sulfide nickel catalyst on a gamma alumina support. Journal of Power Sources 159: 1248 – 1257.

Horng, R-F., Chang, Y-P., Huang, H-H. and Lai, M.P., 2007. A study of the hydrogen production from a small plasma converter. Fuel 86(1-2): 81 – 89.

IEA, 2004. International Energy Agency. Hydrogen and Fuel Cells – Review of National R and D Programs. OECD/IEA, Paris. Available online at: http://www.iea.org/textbase/nppdf/free/2004/hydrogen.pdf last accessed on Oct 24, 2006.

Ioannides, T. and Verykios, X.E., 1996. Application of a dense silica membrane reactor in the reactions of dry reforming and partial oxidation of methane. Catalysis Letters 36 (3-4): 165 – 169.

Ioannides, T. and Verykios, X.E., 1997. Catalytic partial oxidation of methane in a novel heat-integrated wall reactor. Catalysis Letters 47 (3-4): 183 – 188.

Iordanidis, A.A., Kechagiopoulos, P.N., Voutetakis, S.S., Lemonidou, A.A. and Vasalos, I.A., 2006. Autothermal sorption-enhanced steam reforming of bio-oil/biogas mixture and energy generation by fuel cells: Concept analysis and process simulation. International Journal of Hydrogen Energy 31: 1058 – 1065.

IPCC, 2001. Climate Change 2001: Mitigation – Contribution of Working Group III to the third assessment report of the Intergovernmental Panel on climate change. Cambridge University Press.

Isaacson, R., 1991. Anaerobic Digestion. In: Isaacson, R. (ed). Methane from Community Wastes. Elsevier Applied Science: New York. pp 53 – 59.

Janssen, M.G.J., Lindblad, P., van Niel, E.W.J., Reith, J.H. and Wijffels, R.H., 2002. Editorial: Biohydrogen 2002. International Journal of Hydrogen Energy 27: 1123 – 1124.

Jensen, J.K. and Jensen, A.B., 2000. Biogas and natural gas: Fuel mixture for the future. *In*: Proceedings of the 1st World Conference and Exhibition on Biomass for Energy and Industry, Sevilla.

Jing, Q., Lou, H., Mo, L. and Zheng, X., 2006. Comparative study between fluidized bed and fixed bed reactors in methane reforming with CO_2 and O_2 to produce syngas. Energy Conversion and Management 47(4): 459 – 469.

Johnson, J., 2004. Getting to 'clean coal'. Chemical and Engineering News 82(8): 20 – 25.

Jones, L., 2008. Cornell University. Personal communication.

Keenan, G.R., T. Carlson and S. Gronich, 2004. Validation of an Integrated System for a Hydrogen-Fueled Power Park. In: DOE Hydrogen Program FY 2004 Progress Report: 639 – 642.

Kennedy, D., 2004. Editorial: The hydrogen solution. Science 309: 917 – 917.

Kintisch, E. Making dirty coal plants cleaner. 2007. Science 317: 184 – 186.

Koelsch, R.K., 2006. Personal communication via email on Mar 7 2006.

Komiyama, M., T. Misonou, S. Takeuchi, K. Umetsu and J. Takahashi, 2006. Biogas as a reproducible energy source: Its steam reforming for electricity generation and for farm machine fuel. International Congress Series 1293: 234 – 237.

Kreutz, T., Williams, R., Consonni, S. and Chiesa, P. and 2005. Co-production of hydrogen, electricity and CO_2 from coal with commercially ready technology. Part A: Economic Analysis. International Journal of Hydrogen Energy 30 (7): 769 – 784.

Krich, K., Augenstein, D., Batmale, J.P., Benemann, J., Rutledge, B. and Salour, D., 2005. Biomethane from Dairy Waste: A Sourcebook for the Production and Use of Renewable Natural Gas in California. Prepared for Western United Dairymen.

Krongold, M., 2004. Hydrogen: Making the Transition from Industrial Chemical to Energy Carrier. Proceedings of the U.S. Department of Energy Hydrogen Learning Workshop, Austin, TX. Available online at: http://www.sentech.org/Hydrogen%20Workshop%20-%20Austin/08%20-%20Marty%20Krongold.pdf

Labatut, R.A., 2008. Personnal communication. ral32@cornell.edu.

Larentis, A.L., de Resende, N.S., Salim, V.M.M. and Pinto, J.C., 2001. Modeling and optimization of the combined carbon dioxide reforming and partial oxidation of natural gas. Applied Catalysis A: General 215(1-2): 211 – 224.

Lay, J-J., Lee, Y-J. and Noike, T., 1999. Feasibility of biological hydrogen production from organic fraction of municipal solid waste. Water Research 33 (11): 2579 – 2586.

Lazarus, W.F. and Rudstrom, M., 2007. The economics of anaerobic digester operation on a Minnesota dairy farm. Review of Agricultural Economics 29 (2): 349 – 364.

Leclerc, C.A., Redenius, J.M. and Schmidt, L.D., 2001. Fast lightoff of millisecond reactors. Catalysis Letters 79 (1-4): 39 – 44.

Lee, D., Hacarlioglu, P. and Oyama, S.T., 2004. The effect of pressure in membrane reactors: trade-off in permeability and equilibrium conversion in the catalytic reforming of CH_4 with CO_2 at high pressure. Topics in Catalysis 29(1-2): 45 – 57.

Levin, D.B., Pitt, L., Love, M., 2004. Biohydrogen production: prospects and limitations to practical application. International Journal of Hydrogen Energy 29 173 – 185.

Levy, M., Levitan, R., Rosin, H. and Rubin, R., 1993. Solar energy storage via a closed-loop chemical heat pipe. Solar Energy 50(2): 179 – 189.

Lewis, N.S., 2007. Toward cost-effective solar energy use. Science 315: 798 – 801.

Liu, B.S. and Au, C.T., 2001. A La2NiO4-zeolite membrane reactor for the CO_2 reforming of methane to syngas. Catalysis Letters 77 (1-3): 67 – 74.

Liu, Z-W., Jun, K-W., Roh, H-S. and Park, S-E., 2002. Hydrogen production for fuel cells through methane reforming at low temperatures. Journal of Power Sources 111(2): 283 – 287.

Ludington, D.C., 2001. Energy Audit of AA Dairy (unpublished report to NYSERDA). DL Tech, Inc., P.O. Box 3910, Ithaca NY-14852.

Lutz, A.E., Bradshaw, R.W., Bromberg, L. and Rabinovich, A., 2004. Thermodynamic analysis of hydrogen production by partial oxidation reforming. International Journal of Hydrogen Energy 29(8): 809 – 816.

Ma, J., 2002. Spatial analysis of the potential for dairy manure as a renewable energy resource in New York State. Cornell University MS Thesis. Thesis 2002 M323.

Ma, J., 2006. Web-based spatial decision support system for utilizing organic wastes as renewable energy resources in New York State. Cornell University Doctoral Dissertation. Thesis 2006 M323.

Ma, J., Scott, N.R., DeGloria, S.D. and Lembo, A.J., 2005. Siting analysis of farm-based centralized anaerobic digester systems for distributed generation using GIS. Biomass and Bioenergy 28(6): 591 – 600.

Ma, L. and Trimm, D.L., 1996. Alternative catalyst bed configurations for the autothermic conversion of methane to hydrogen. Applied Catalysis A: General 138(2): 265 – 273.

MacKenzie, J.J., 1994. The keys to the car: electric and hydrogen vehicles for the 21st Century. World Resources Institute, Hampden Station, MD.

Mallens, E.P.J., Hoebink, J.H.B.J., and Marin, G.B., 1995. An investigation on the reaction mechanism for the partial oxidation of methane to synthesis gas over platinum. Catalysis Letters 33 (3-4): 291 – 304.

Mallens, E.P.J., Hoebink, J.H.B.J., and Marin, G.B., 1997. The reaction mechanism of the partial oxidation of methane to synthesis gas: a transient kinetic study over rhodium and a comparison with platinum. Journal of Catalysis 167: 43 – 56.

Mann, M. K., 2003. Production and Delivery Analysis in the HFC and IT Program. National Renewable Energy Laboratory. Available online at: http://www1.eere.energy.gov/hydrogenandfuelcells/pdfs/merit03/62_nrel_maggie_mann.pdf. Last accessed 2-24-07.

McCarl, B.A. and Schneider, U.A., 2000. U.S. Agriculture's role in a greenhouse gas emission mitigation world: An economic perspective. Review of Agricultural Economics 22 (1): 134 – 159.

McMillian, M.H. and Lawson, S.A., 2006. Experimental and modeling study of hydrogen/syngas production and particulate emissions from a natural gas-fueled partial oxidation engine. International Journal of Hydrogen Energy 31(7): 847 – 860.

Mears, D.T., 2001. Biogas applications for large dairy operations: Alternatives to conventional engine-generators, Prepared under contract to: Cornell Cooperative Extension Association of Wyoming County.

Melendez, M. and Milbrandt, A., 2005. Analysis of the Hydrogen Infrastructure Needed to Enable Commercial Introduction of Hydrogen-Fueled Vehicles. Proceedings of the National Hydrogen Association Annual Hydrogen Conference 2005, Washington, D.C. Available online at: http://www.nrel.gov/hydrogen/pdfs/37903.pdf. Last accessed Aug 2 2007.

Melendes, M. and Milbrandt, A., 2006. Hydrogen Infrastructure Transition Analysis. Milestone Report NREL/TP-540-38351. Available online at: http://www.nrel.gov/hydrogen/pdfs/38351.pdf. Last accessed Aug 2 2007.

Milbrandt, A., 2006. NREL, Colorado. Personal communication.

Milbrandt, A., and Mann, M., 2007. Potential for Hydrogen Production from Key Renewable Resources in the United States. NREL Technical Report NREL/TP-640-41134.

Minott, S.J., 2002. Feasibility of Fuel Cells for Energy Conversion on the Dairy Farm. MS Thesis, Cornell University Thesis 2002 M566.

Minott, S.J. and Scott, N.R., 2001. Feasibility of fuel cells for energy conversion on dairy farms. Paper Number: 01-7015 presented at the 2001 ASABE Annual International Meeting, Sacramento, California, USA July 30-August 1, 2001.

Muradov, N.Z., 1998. CO_2-free production of hydrogen by catalytic pyrolysis of hydrocarbon fuel. Energy and Fuels 12(1): 41 – 48.

Murdoch, J., 2000. Networks – a new paradigm of rural development? Journal of Rural Studies 16 (4): 407 – 419.

Murphy, J.D., E. McKeogh and G. Kiely, 2004. Technical /economic / environmental analysis of biogas utilization. Applied Energy 77: 407 – 427.

Naumann, S.T. and Myrén, C., 1995. Fuel processing of biogas for small fuel cell power plants. Journal of Power Sources 56 (1): 45 – 49.

NCAT, 1984. An Introduction to Biogas Production on the Farm. Prepared for the US Department of Energy by the National Center for Appropriate Technology under Contract No. DE-AC01-82CE15095.

NRC (National Research Council and National Academy of Engineering of the National Academies), 2004. The hydrogen economy: opportunities, costs, barriers and R & D needs. National Academies Press, Washington, DC.

NREL, 2005. Learning about renewable energy and energy efficiency. Available online at http://www.nrel.gov/learning/eds_hydro_production.html (accessed on Dec 8, 2005).

Ogden, J.M., 1999. Prospects for building a hydrogen energy infrastructure. Annual Review of Energy and the Environment 24: 227 – 279.

Ogden, J., 2004. Where will the hydrogen come from? System considerations and hydrogen supply. In: Sperling, D. and Cannon, J.S. (eds), The Hydrogen Energy Transition: Moving toward the post petroleum age in transportation. Elsevier Academic Press, Burlington, MA.

Orecchini, F., 2006. The era of energy vectors. International Journal of Hydrogen Energy 31(14): 1951 – 1954.

Paglieri, S.N. and Way, J.D., 2002. Innovations in palladium membrane research. Separation and Purification Methods 31(1): 1 – 169.

Pandya, J.D., Ghosh, K. K. and Rastogi, S. K., 1988. A phosphoric acid fuel cell coupled with biogas. Energy 13 (4): 383 – 388.

Panichelli, L. and Gnansounou, E., 2007. GIS-based approach for defining bioenergy facilities location: A case study in Northern Spain based on marginal delivery costs and resources competition between facilities. Biomass and Bioenergy. In Press, Corrected Proof, Available online 11 December 2007.

Parker, N. (2004). Using Natural Gas Transmission Pipeline Costs to Estimate Hydrogen Pipeline Costs". Institute of Transportation Studies, University of California, Davis.

Patil, C.S., van Sint Annaland, M. and Kuipers, J.A.M. Design of a Novel Autothermal Membrane-Assisted Fluidized-Bed Reactor for the Production of Ultrapure Hydrogen from Methane. Industrial and Engineering Chemistry Research 44 (25): 9502 – 9512.

Patt, J., Moon, D.J., Phillips, C. and Thompson, L., 2000. Molybdenum carbide catalysts for water–gas shift. Catalysis Letters 65: 193 – 195.

Poirier, M.G. and Sapundzhiev, C., 1997. Catalytic decomposition of natural gas to hydrogen for fuel cell applications. International Journal of Hydrogen Energy 22(4): 429 – 433.

Prettre, M., Eichner, C. and Perrin, M., 1946. The catalytic oxidation of methane to carbon monoxide and hydrogen. Transactions of the Faraday Society 42: 335 – 339.

Pretty, J. and Ward, H., 2001. Social capital and the environment. World Development 29 (2): 209 – 227.

Pronto, J. and C. Gooch, 2007. Anaerobic Digester at New Hope View Farm: Case Study AD-2. Available online at http://www.manuremanagement.cornell.edu/HTMLs/CaseStudies.htm. Last accessed Feb 26 2008.

Pronto, J. and C. Gooch, 2008. Anaerobic Digester at Ridgeline Dairy Farm: Case Study AD-4. Available online at http://www.manuremanagement.cornell.edu/HTMLs/CaseStudies.htm. Last accessed Feb 26 2008.

Ramachandra, T.V., 2008. Geographical information system approach for regional biogas potential assessment. Research Journal of Environmental Sciences 2(3): 170.

Richardson, J.T. and Paripatyadar, S.A., 1990. Carbon dioxide reforming of methane with supported rhodium. Applied Catalysis, 61: 293.

Rostrup-Nielsen, J.R. and Bak Hansen, J.-H., 1993. CO_2-Reforming of methane over transition metals. Journal of Catalysis 144(1): 38 – 49.

Ruckenstein, E. and Wang, H.Y., 2001. Combined catalytic partial oxidation and CO_2 reforming of methane over supported cobalt catalysts. Catalysis Letters 73(2-4): 99 – 105.

Rydén, M. and Lyngfelt, A., 2006. International Journal of Hydrogen Energy 31(10): 1271 – 1283.

Saikkonen, K. A., 2006. Technical and economic feasibility of upgrading dairy manure-derived biogas for natural gas pipeline. MS Thesis. Cornell University Thesis 2006 S255.

Schrag, D.P., 2007. Preparing to capture carbon. Science 315: 812 – 813.

Scott, N.R., 2008. Personnal communication. nrs5@cornell.edu.

Serban, M., Lewis, M.A., Marshall, C.L. and Doctor, R.D., 2003. Hydrogen production by direct contact pyrolysis of natural gas. Energy and Fuels 17(3): 705 – 713.

Service, R.F., 2004. The Hydrogen Backlash. Science 305: 958 – 961.

Shiga, H., Shinda, K., Hagiwara, K., Tsutsumi, A., Sakurai, M., Yoshida, K. and Bilgen, E., 1998. Large-scale hydrogen production from biogas. International Journal of Hydrogen Energy 23: 631 – 640.

Sleat, R. and R. Mah, 1987. Hydrolytic bacteria. In: Chynoweth, D.P. and R. Isaacson (eds). Anaerobic Digestion of Biomass. Elsevier Applied Science: New York. pp 15 – 34.

Smith, W.R. and Lísal, M., 2004. Molecular simulation of reaction and adsorption in nanochemical devices: increase of reaction conversion by separation of a product from the reaction mixture. In: Laganá et al. (Eds.). Computational Science and Its Applications – ICCSA 2004. Conference Proceedings Part II. Springer-Verlag, Berlin.

Sparling, R., Risbey, D. and Poggi-Varaldo, H.M., 1997. Hydrogen production from inhibited anaerobic composters. International Journal of Hydrogen Energy 22: 563 – 566.

Spath, P.L. and Mann, M.K., 2001. Life Cycle Assessment of Hydrogen Production via Natural Gas Steam Reforming. National Renewable Energy Laboratory TP-570-27637. Available online at http://www.nrel.gov/docs/fy01osti/27637.pdf last accessed on Oct 24, 2006.

Staniforth, J. and Ormerod, R.M., 2002. Implications for Using Biogas as a Fuel Source for Solid Oxide Fuel Cells: Internal Dry Reforming in a Small Tubular Solid Oxide Fuel Cell. Catalysis Letters 81(1-2): 19 – 23.

Steinberg, M., 1994. Fossil fuel and greenhouse gas mitigation technologies. International Journal of Hydrogen Energy 19(8): 659 – 665.

Steinberg, M., 1998. Production of hydrogen and methanol from natural gas with reduced CO_2 emission. International Journal of Hydrogen Energy 23(6): 419 – 425.

Steinberg, M., 1999. Fossil fuel decarbonization technology for mitigating global warming. International Journal of Hydrogen Energy 24(8): 771 – 777.

Tang, S., Lin, J. and Tan, K.L., 1998. Partial oxidation of methane to syngas over Ni/MgO, Ni/CaO and Ni/CeO2. Catalysis Letters 51 (3-4): 169 – 175.

Tiemersma, T.P., Patil, C.S., van Sint Annaland, M. and Kuipers, J.A.M. Modelling of packed bed membrane reactors for autothermal production of ultrapure hydrogen. Chemical Engineering Science 61: 1602 – 1616.

Tong, G.C.M., Flynn, J. and Leclerc, C.A., 2005. A dual catalyst bed for the autothermal partial oxidation of methane to synthesis gas. Catalysis Letters 102 (3-4): 131 – 137.

Trimm, D.L., 1977. Catalysis Review: Science and Engineering 16: 155.

Trimm, D.L. and Önsan, Z.I., 2001. Onboard fuel conversion for hydrogen-fuel cell vehicles. Catalysis Reviews 43 (1-2): 31 – 84.

Turner, J.A., 2004. Sustainable Hydrogen Production. Science 305 (5686): 972 – 974.

Udengaard, N.R., Bak Hansen, J.-H, Hanson, D.C. and Stal, J.A., 1992. Sulfur passivated reforming process lowers syngas H_2/CO ratio. Oil and Gas Journal 90(10): 62 – 67.

Uemiya, S., 2004. Brief review of steam reforming using a metal membrane reactor. Topics in Catalysis 29 (1-2): 79 – 84.

Van Ginkel, S., Sung, S. and Lay, J-J., 2001. Biohydrogen production as a function of pH and substrate concentration. Environmental Science and Technology 35: 4726 – 4730.

Van Ginkel, S., Oh, S. and Logan, B.E., 2005. Biohydrogen gas production from food processing and domestic wastewaters. International Journal of Hydrogen Energy 30: 1535 – 1542.

Van herle, J., Maréchal, F., Leuenberger, S. and Favrat, D., 2003. Energy balance model of a SOFC cogenerator operated with biogas. Journal of Power Sources 118 (1-2): 375 – 383.

Van herle, J., Maréchal, F., Leuenberger, S., Membrez, Y., Bucheli, O. and Favrat, D., 2004. Process flow model of solid oxide fuel cell system supplied with sewage biogas. Journal of Power Sources 131 (1-2): 127 – 141.

Vasileiadis, S. and Ziaka-Vasileiadou, Z., 2004. Biomass reforming process for integrated solid oxide-fuel cell power generation. Chemical Engineering Science 59 (22-23): 4853 – 4859.

Verykios, X.E., 2003. Catalytic dry reforming of natural gas for the production of chemicals and hydrogen. International Journal of Hydrogen Energy 28(10): 1045 – 1063.

Vogel, G., 2004. Will the future dawn in the north? Science 309: 966 – 967.

Warren, D., 2004. Personal communication via email on Dec 27 2004.

Wellinger, W. and A. Lindberg, 2000. Biogas upgrading and utilization. IEA Bioenergy Task 24: Energy from biological conversion of organic waste.

Williams, K.A., Leclerc, C.A., and Schmidt, L.D., 2005. Rapid lightoff of syngas production from methane: a transient product analysis. AIChE Journal, 51: 247 – 260.

Wright, P. and Graf, K., 2003a. Anaerobic Digester at AA Dairy: Case Study AD-1. Available online at http://www.manuremanagement.cornell.edu/HTMLs/CaseStudies.htm. Last accessed Feb 25 2008.

Wright, P. and Graf, K., 2003b. Anaerobic Digester at New Hope View Farm: Case Study AD-2. Available online at http://www.manuremanagement.cornell.edu/HTMLs/CaseStudies.htm. Last accessed Feb 26 2008.

Wright, P. and Ma, J., 2003a. Fixed Film Digester at Farber Dairy Farm: Case Study AD-3. Available online at http://www.manuremanagement.cornell.edu/HTMLs/CaseStudies.htm. Last accessed Feb 25 2008.

Wright, P. and Ma, J., 2003b. Anaerobic Digester at Noblehurst Farms, Inc.: Case Study AD-5. Available online at http://www.manuremanagement.cornell.edu/HTMLs/CaseStudies.htm. Last accessed Feb 25 2008.

Wright, P. and Perschke, S.P., 1998. Anaerobic Digestion and Wetland Treatment Case Study: Comparing Two Manure Odor Control Systems for Dairy Farms. ASAE Paper 984105. Presented at ASAE Annual Meeting, Orlando, Florida, July 12 – 16, St. Joseph, MI. 11pp.

Yaremchenko, A.A., Valente, A.A., Kharton, V.V., Tsipis, E.V., Frade, J.R., Naumovich, E.N., Rocha, J. and Marques, F.M.B., 2003. Oxidation of dry methane on the surface of oxygen ion-conducting membranes. Catalysis Letters 91(3-4): 169 – 174.

York, A.P.E., Xiao, T. and Green, M.L.H., 2003. Brief overview of partial oxidation of methane to synthesis gas. Topics in Catalysis 22 (3-4): 345 – 358.

Youngquist, W., 1997. GeoDestinies: the inevitable control of earth resources over nations and individuals. National Book Company, Portland, OR.

Zhang, Z.L., Tsipouriari, V.A., Efstathiou, A.M. and Verykios, X.E., 1996. Reforming of methane with carbon dioxide to synthesis gas over supported rhodium catalysts. Journal of Catalysis 158: 51 – 63.

Zhou, L.M., Xue, B., Kogelschatz, U. and Eliasson, B., 1998. Nonequilibrium plasma reforming of greenhouse gases to synthesis gas. Energy and Fuels 12(6): 1191 – 1199.