Low-Risk Persistent Identification: the “Entity” (N2T) Resolver

10 October 2006

John Kunze, California Digital Library,
University of California

NT2 “Entity” – overview

Establish a consortium and a small web server.

Each member publishes URLs under n2t.info:

`http://n2t.info/12345/foo/bar.zaf`

…which redirects to the member server URL.

Why? It solves the same *persistent identifier* problem as URN, DOI, and Handle systems, but more fully, and at lower cost and risk.

Persistent identification

Persistent identifiers? We have them.

- But still need persistent *actionable* ids

Actionable “with widely available tools”

- Which really means “with *URLs*”

URNs, ARKs, Handles, DOIs, etc. become actionable (practically speaking) when embedded in URLs

- All these ids have similar maintenance costs, and they all break for the *usual* reasons

The usual reasons

Whatever the string, what matters is the *thing*

- If the thing's unavailable, the id's broken

Broken, for URLs, means either

- The hostname is broken
  - Server down, gone, or renamed *
  - Domain name lost, provider out of business
- Or the pathname to the thing is broken
  - Thing down, gone, or renamed *

* No global fix for these, only the provider can fix.

Hostname instability

Domain name lost, provider out of business

- We can help this case

Smaller organizations most vulnerable

- The comfort of not seeing your hostname
- The comfort of *seeing* your hostname
- Traditional solutions: PURL, URN, Handle, DOI
- Solutions tied to special-purpose technology, sometimes complex and proprietary

N2T (Name-to-Thing)

N2T is two things at once

- A consortium of cultural memory organizations

  … and …

- A small, ordinary web server, mirrored in several instances globally for reliability

Basic idea: protect 200 organizations' URLs from *hostname instability* with 200 rewrite rules

How: simple HTTP redirects, one per organization

N2T – user point of view

Each consortium member organization gets a unique number, such as, 12345.

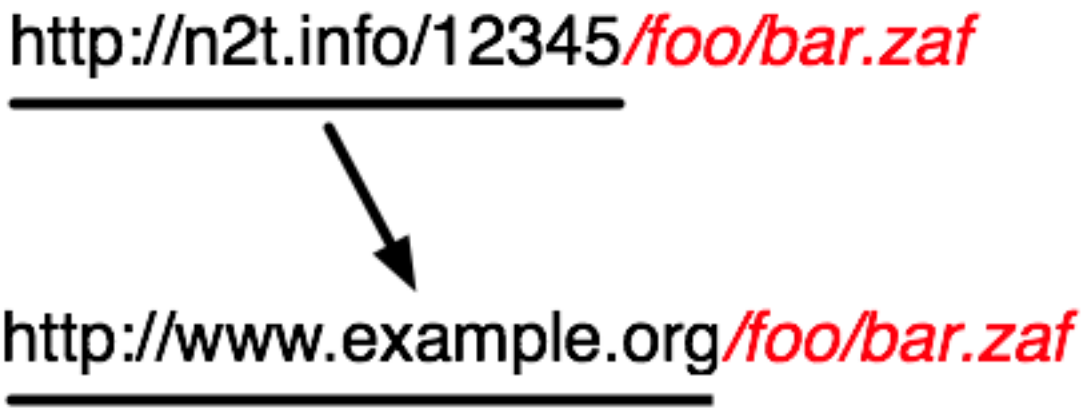

Fig 1. A protected URL is forwarded to a provider currently serving things named by organization 12345. The *path part* is left alone.

N2T – system point of view

Technically, resolution (access to a thing given its name) is two simple steps.

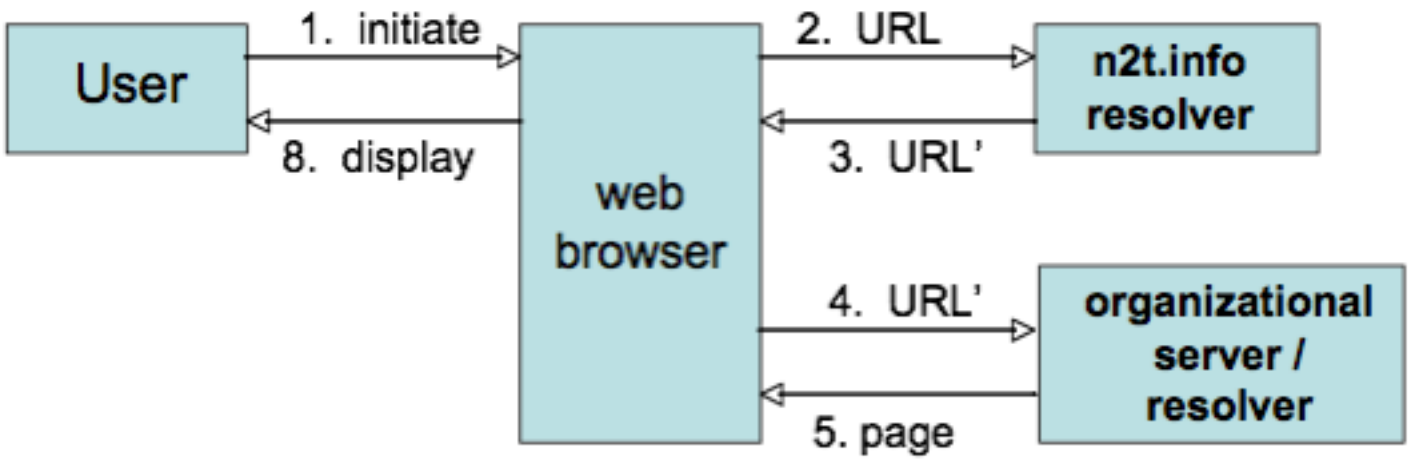

Fig 2. N2t.info maps a protected HTTP URL into a provider URL.

N2T – consortium point of view

"Consortium-lite"

- Members have no fees or responsibilities
- One domain name for whole consortium
  - Rent is $30/year, runs on 4 total web servers

Volunteer member orgs run the servers

- 1 primary + 3 mirrors

Interested bodies: CENDI, DLF, DCC

Interested institutions: CDL, NYU, NLA, …

N2T – global point of view

Regional (eg, Europe, Asia, North America) clusters of mirrored resolver instances, with round-robin failover for redundancy, fault-tolerance, and load-sharing

- No browser modifications required

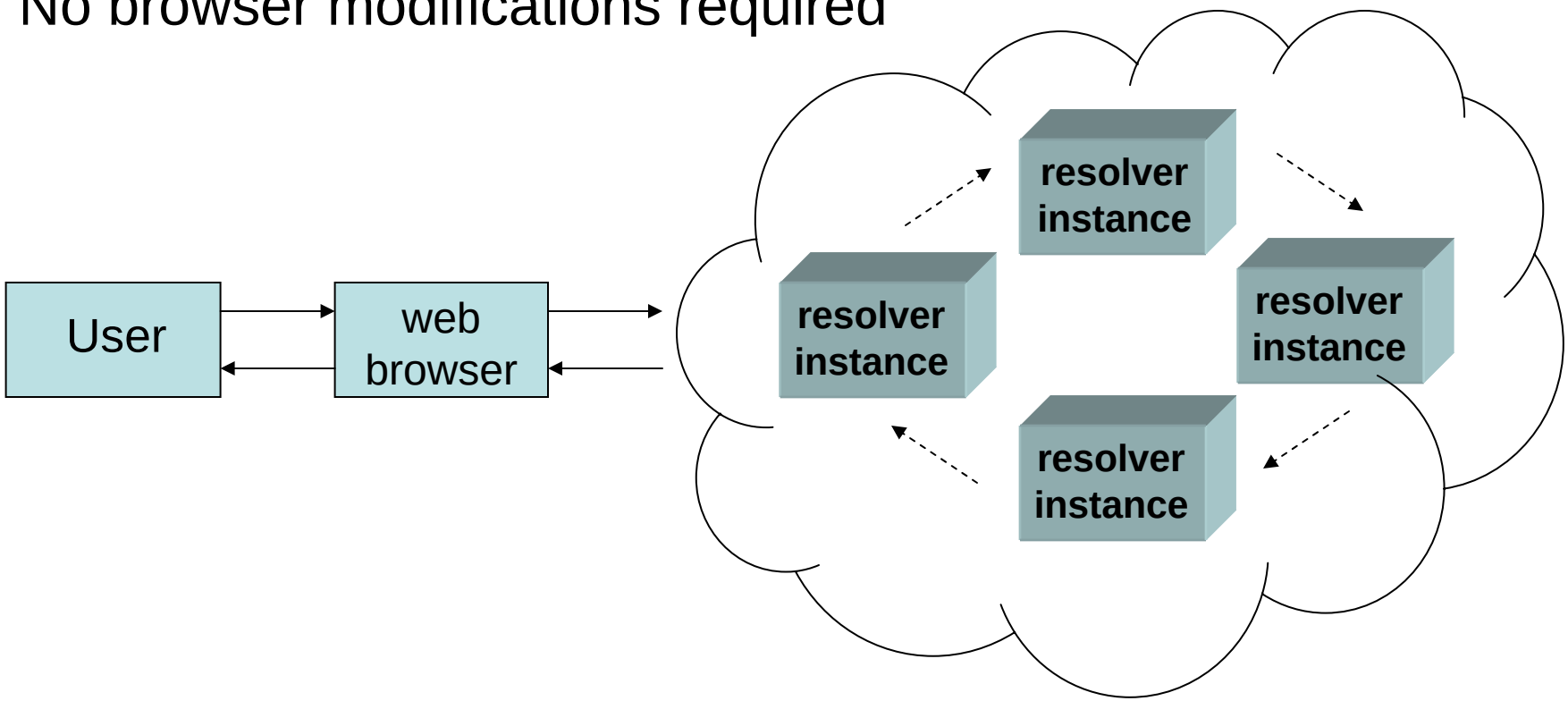

Namespace Splitting Problem

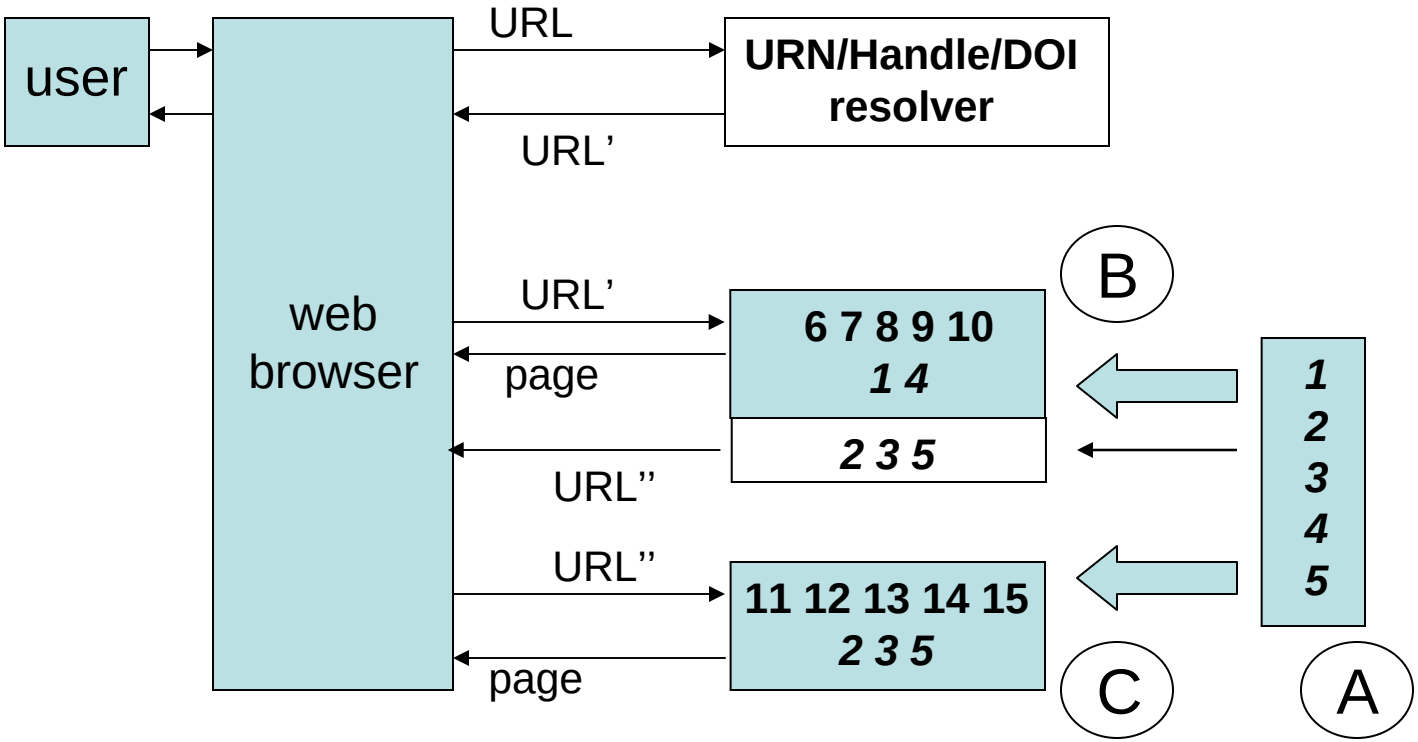

Org'n A's namespace splits when B and C inherit its objects.
Under the URN/Handle/DOI model, B must still forward to C.

Global resolver updating

Per-object resolver needs bulk updates

- Periodic harvest (e.g., daily) of table mappings
- From well-known provider-side web server files, e.g., tools and conventions similar to Google sitemaps

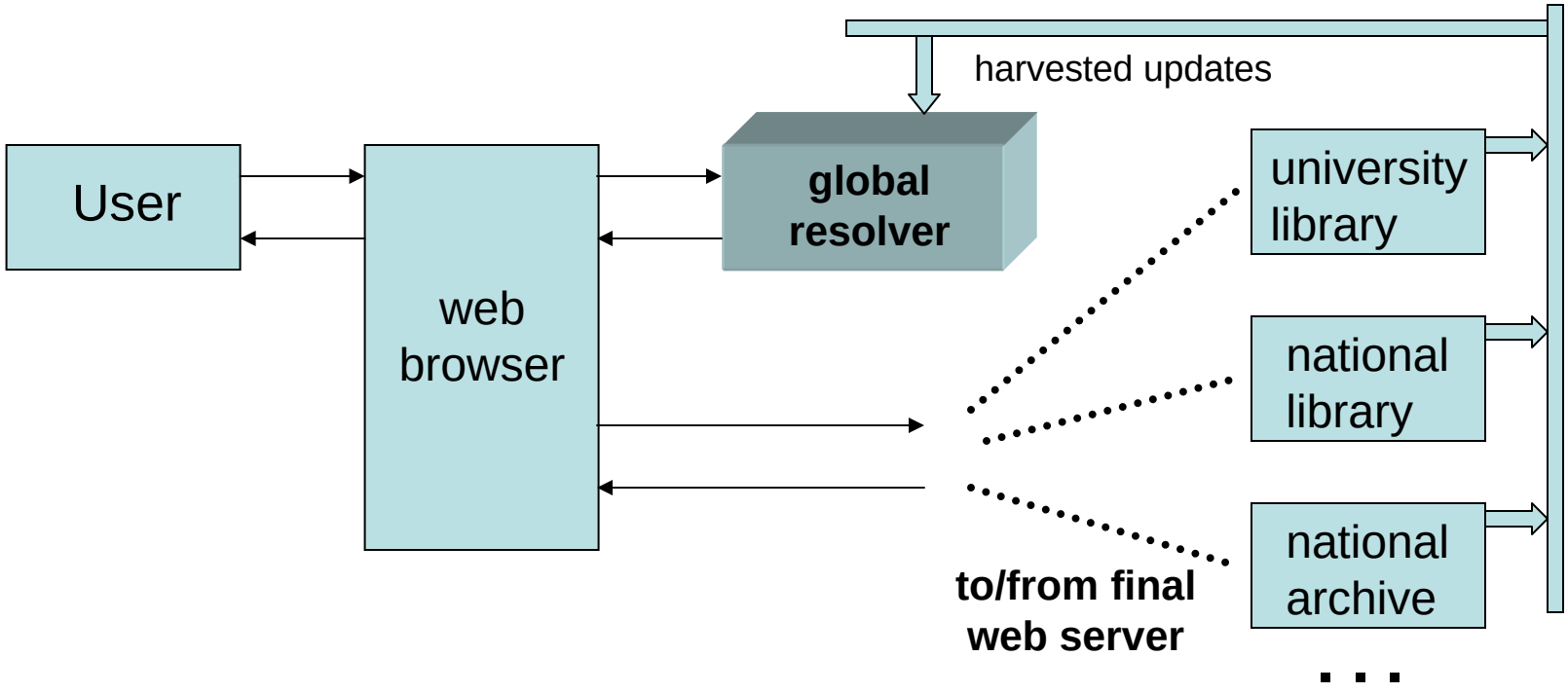

Prototype resolver

Sample identifiers at **n2t.info** – these work now

http://n2t.info/12345/libraries/visitor.html
http://n2t.info/13030/inside
http://n2t.info/urn:nbn:se:uu:diva-3324
http://n2t.info/ark:/13030/tf5p30086k

Incidentally, it can also redirect all URNs, DOIs, and Handles, e.g.,

http://n2t.info/doi:10.1111/j.0307-6946.2004.00571.x

The n2t.info persistent identifier resolver

Advantages

- Big reduction in architectural complexity
- No browser modification required
- Identifier scheme-agnostic
- No proprietary, special-purpose infrastructure to carry forward as a liability to persistence

John.Kunze@ucop.edu

California Digital Library (CDL)